KAUOHENG

KH-313 SERIES PARTS LIST & SERVICE MANUAL

電腦橫編織機　　KH

COMPUTERIZED FLAT KNITTING MACHINE

KAUOHENG

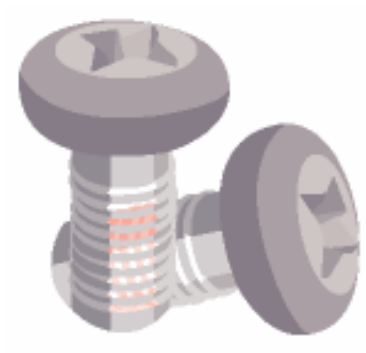

KH-313 零件表 PARTS LIST

電腦橫編織機 KH

COMPUTERIZED FLAT KNITTING MACHINE

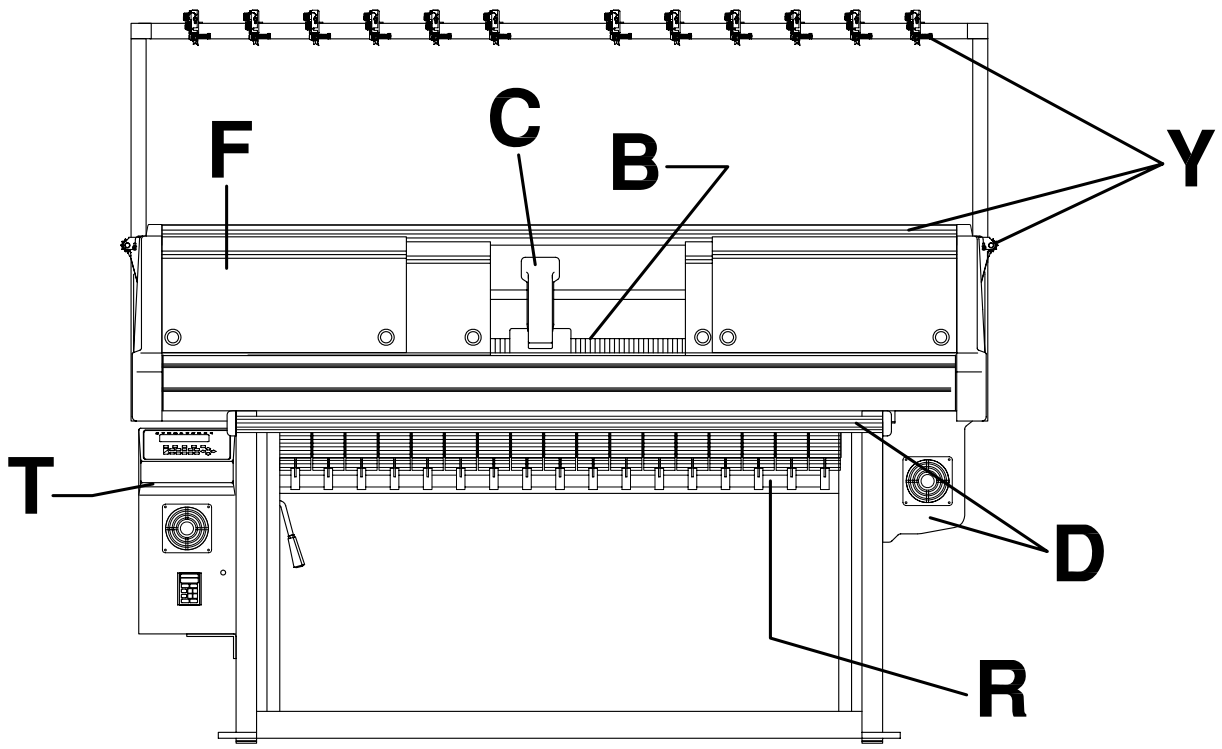

紗線引導裝置 /Yarn Guide Equipment:	Y
針床與搖床 /Bed & Racking Unit:	B
機頭部分 /Carriage:	C
傳動裝置 /Driving Equipment:	D
捲布裝置 /Take-down Equipment:	R
主體與護蓋 /Frame & Cover:	F
控制單元 /Controller:	T

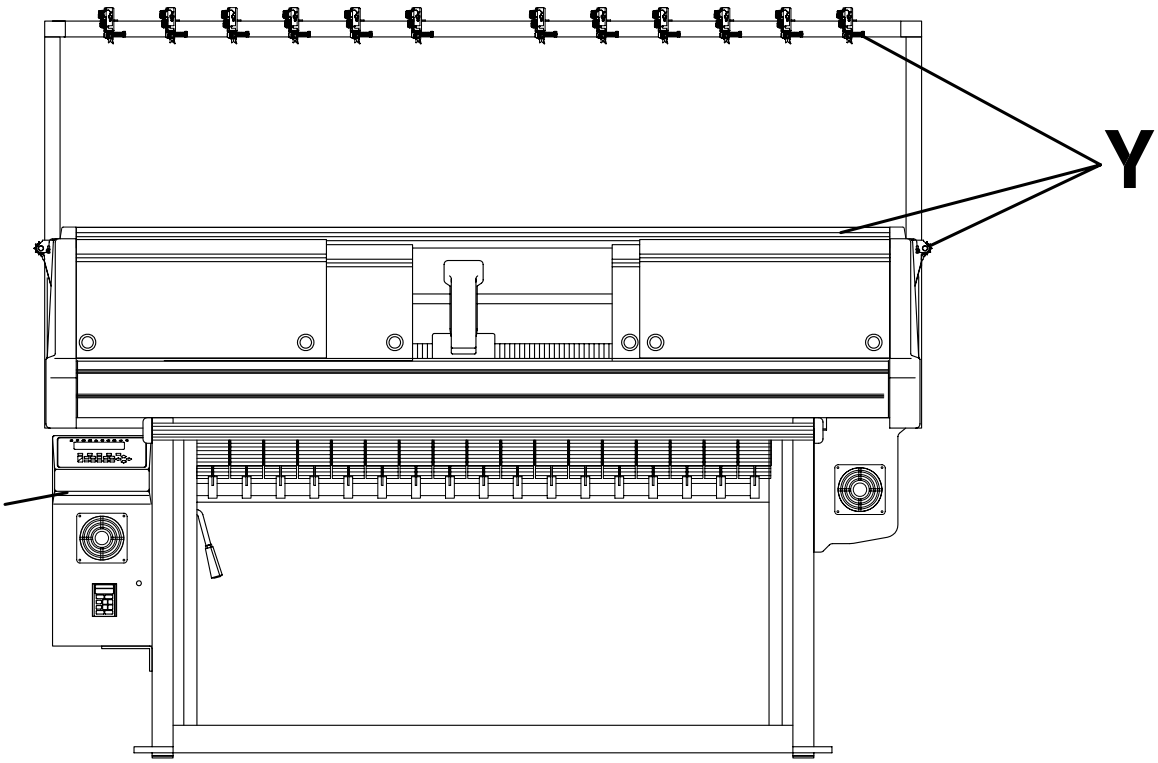

紗線引導裝置 /Yarn Guide Equipment:

Y1-Y7

313Series

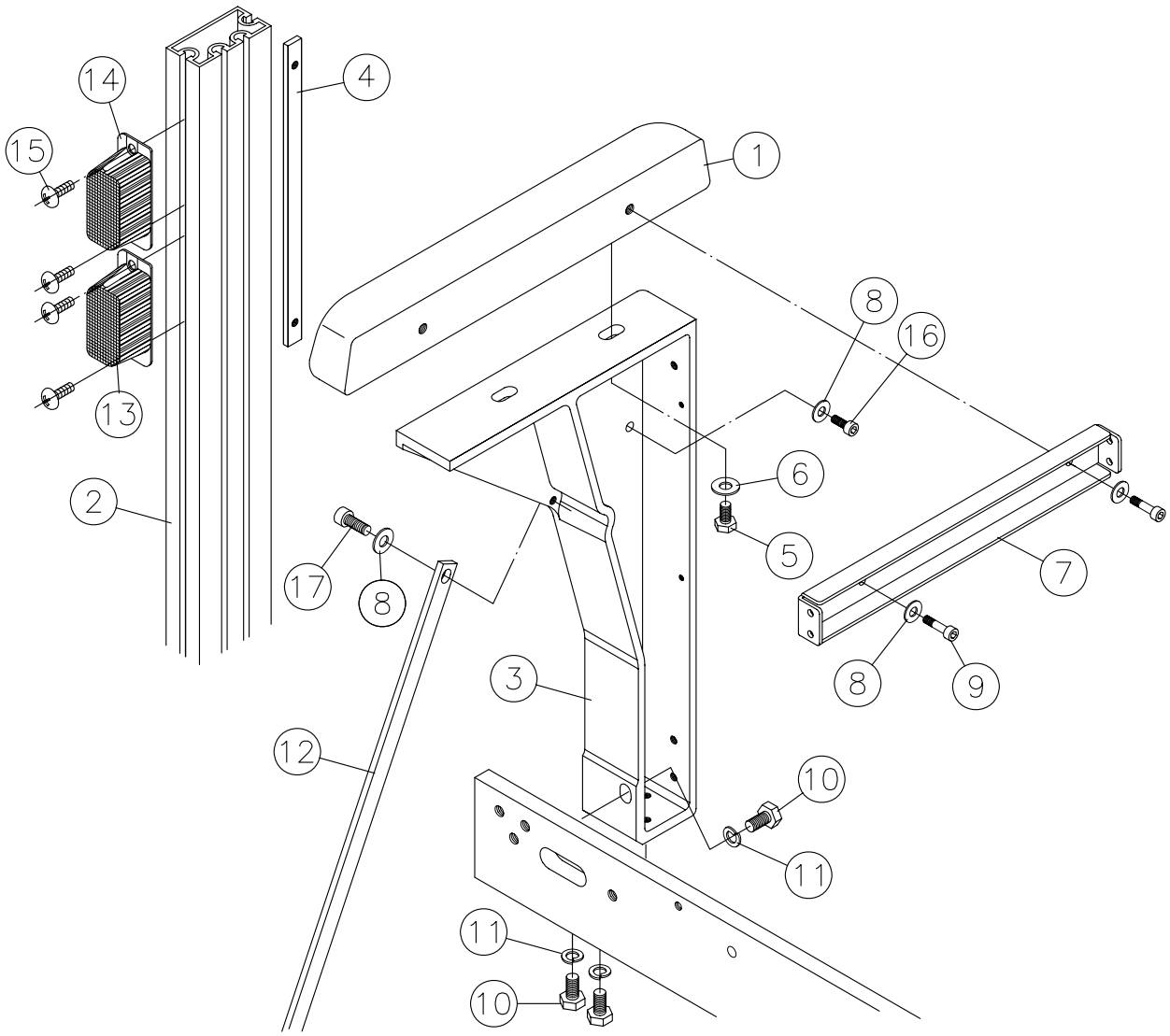

Y

No.	編號 PARTS No.	品名 PARTS NAME	數量 QTY	備註 REMARKS
1	KCK9017	SIDE COVER <L,R>	2	
2	KCF9008N	CONE STAND PLATE POLE	2	
3	KCK9019	BRACKET <L,R>	2	
4	KCK9019B	UNT	1	
5	KSS0830	SCREW <M8x30>	4	
6	KSW0008	WASHER	4	
7	KCK9015	CONE STAND MOUNTING PLATE	2	
8	KSW0006	WASHER	4	
9	KSC0625	SCREW <M6x25>	4	
10	KSS0825	SCREW <M8x25>	8	
11	KSWS008	SPRING WASHER	8	
12	KCK9019A	FITTING PLATE	2	
13	KCF9001Y	SIGNAL LAMP	1	YELLOW
14	KCF9001G	SIGNAL LAMP	1	GREEN
15	KSS0510	SCREW <M5x10>	4	
16	KSC0616	SCREW <M6x16>	4	
17	KSC0612	SCREW <M6x12>	2	

313Series

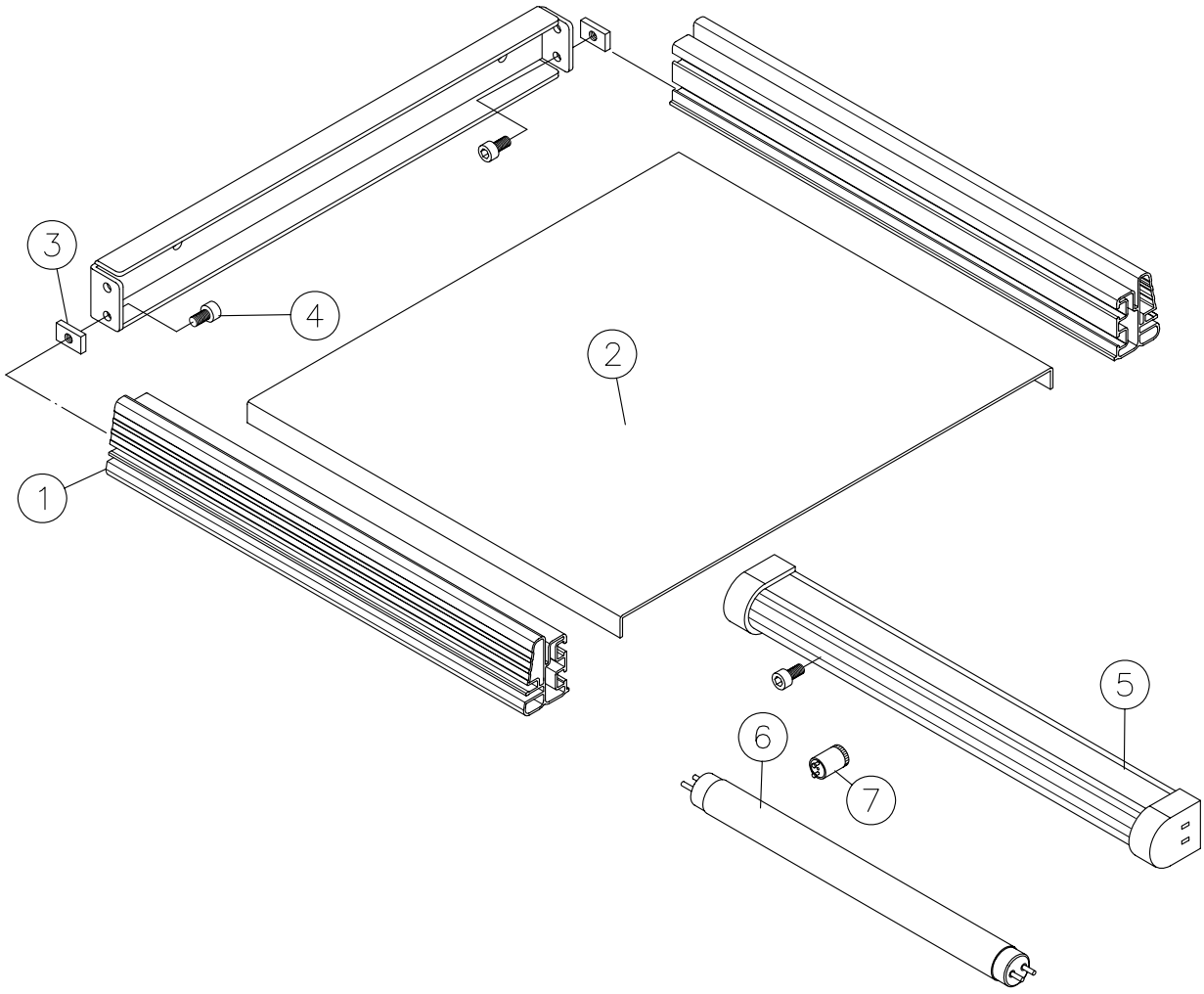

Y

No.	編號 PARTS No.	品名 PARTS NAME	數量 QTY	備註 REMARKS
1	KCF9014	CONE STAND FOLDER	1	30”,40”,54”
2	KCK9011	CONE STAND PLATE	1	30”,40”,54”
3	KCF9070	NUT	11	
4	KSC0610	SCREW <M6X10>	12	
5	KCF9065A	FLUORESCENT LAMP BODY	1	
6	KCF9065B	FLUORESCENT LAMP	1	
7	KCF9065C	STARTER	1	

313Series

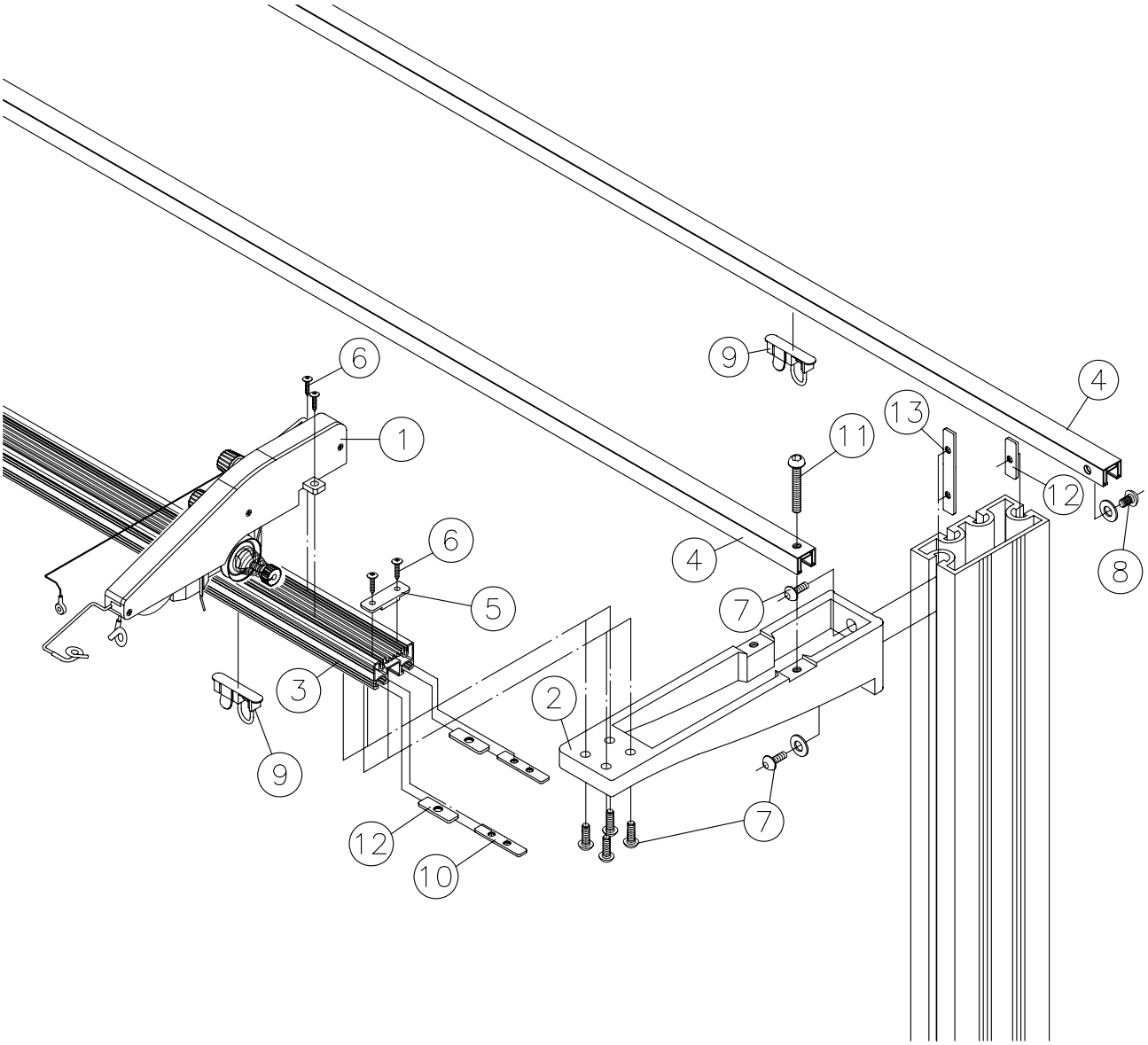

Y

No.	編號 PARTS No.	品名 PARTS NAME	數量 QTY	備註 REMARKS
1	KCF90031N	TENSION SWITCH ASSY <10~18G>	8	54”=12Pcs
2	KCF9004F	BRACKET	2	
3	KCF9108	TENSION FIXING ARM	1	30”,40”,54”
4	KCF9136	YARN GUIDE ARM	2	30”,40”,54”
5	KCF9120	NUT	2	
6	KSS0312	SCREW <M3x12>	20	54”=28Pcs
7	KSD0620	SCREW <M6x20>	14	
8	KSC0610	SCREW <M6x10>	4	
9	KCF9119	YARN GUIDE BRACKET	16	54”=24Pcs
10	KCF9050	NUT	4	
11	KSD0630	SCREW <M6x30>	3	
12	KCF9383A	NUT	4	
13	KCF9383B	NUT	2	

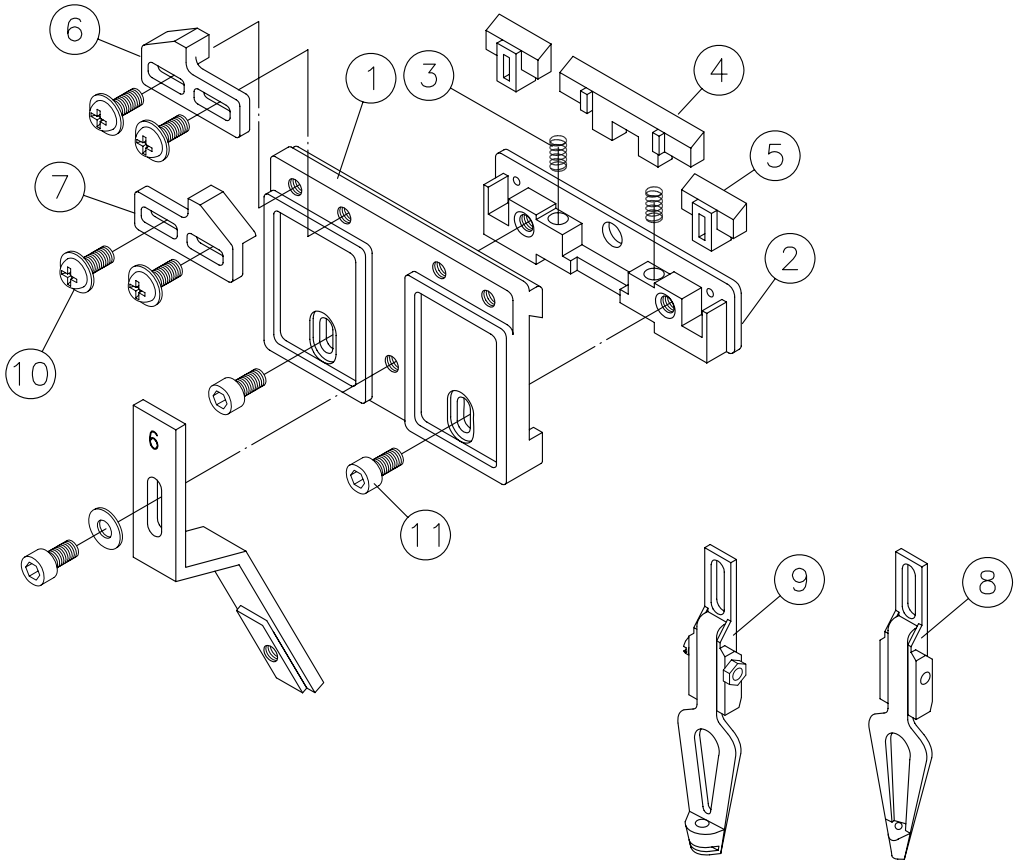

Y

No.	編號 PARTS No.	品名 PARTS NAME	數量 QTY	備註 REMARKS
1	KCF9302	CARRIER	6	
2	KCF9308	CARRIER WEDGE HOLDER	6	
3	KCF9304	PUSH SPRING	12	
4	KCF9309	BRAKE	6	
5	KCF9307	WEDGE FOR CARRIER	12	
6	KSF9303A	CARRIER SETTING PLATE <A>	6	
7	KSF9303B	CARRIER SETTING PLATE <B>	6	
8	KCV3119	YARN FEEDER <10~18G>	6	
9	KCF9319NC	PLATING YARN FEEDER<10~18G>	0	OPTION
10	KSP0408	SCREW <M4x8>	24	
11	KSC0410	SCREW <M4x10>	12	

313Series

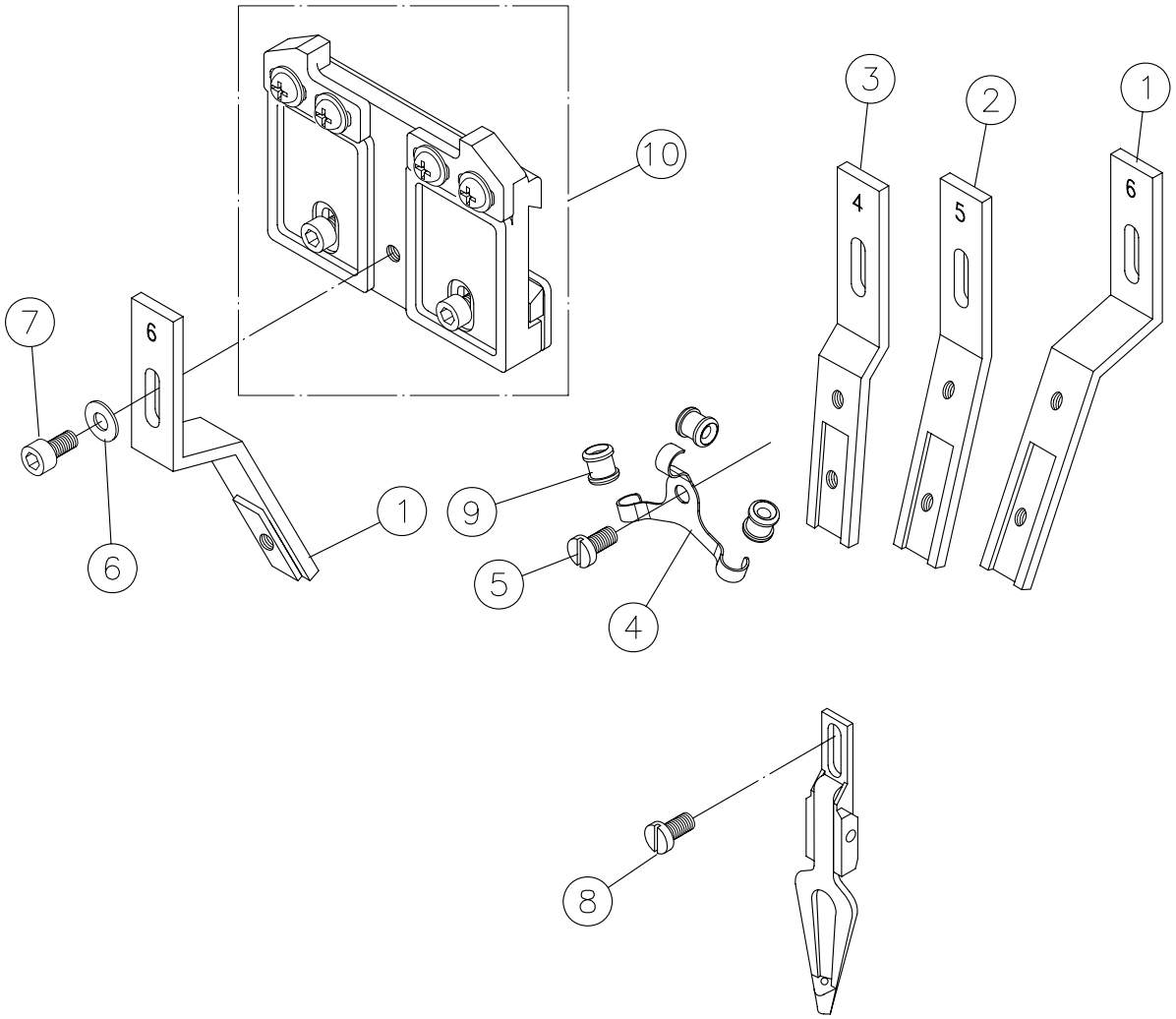

Y

No.	編號 PARTS No.	品名 PARTS NAME	數量 QTY	備註 REMARKS
1	KCV3116	YARN GUIDE HOLDER <1+6>	2	
2	KCV3115	YARN GUIDE HOLDER <2+5>	2	
3	KCV3114	YARN GUIDE HOLDER <3+4>	2	
4	KCW9320N	EYELET HOLDER	6	
5	KSP0405	SCREW <M4x5>	6	
6	KSWS004	SPRING WASHER	6	
7	KSC0408	SCREW <M4x8>	6	
8	KSP0405	SCREW <M4x5>	6	
9	KCW9321	EYELET	18	
10	ASSN001A	CARRIER ASSY.		

313Series

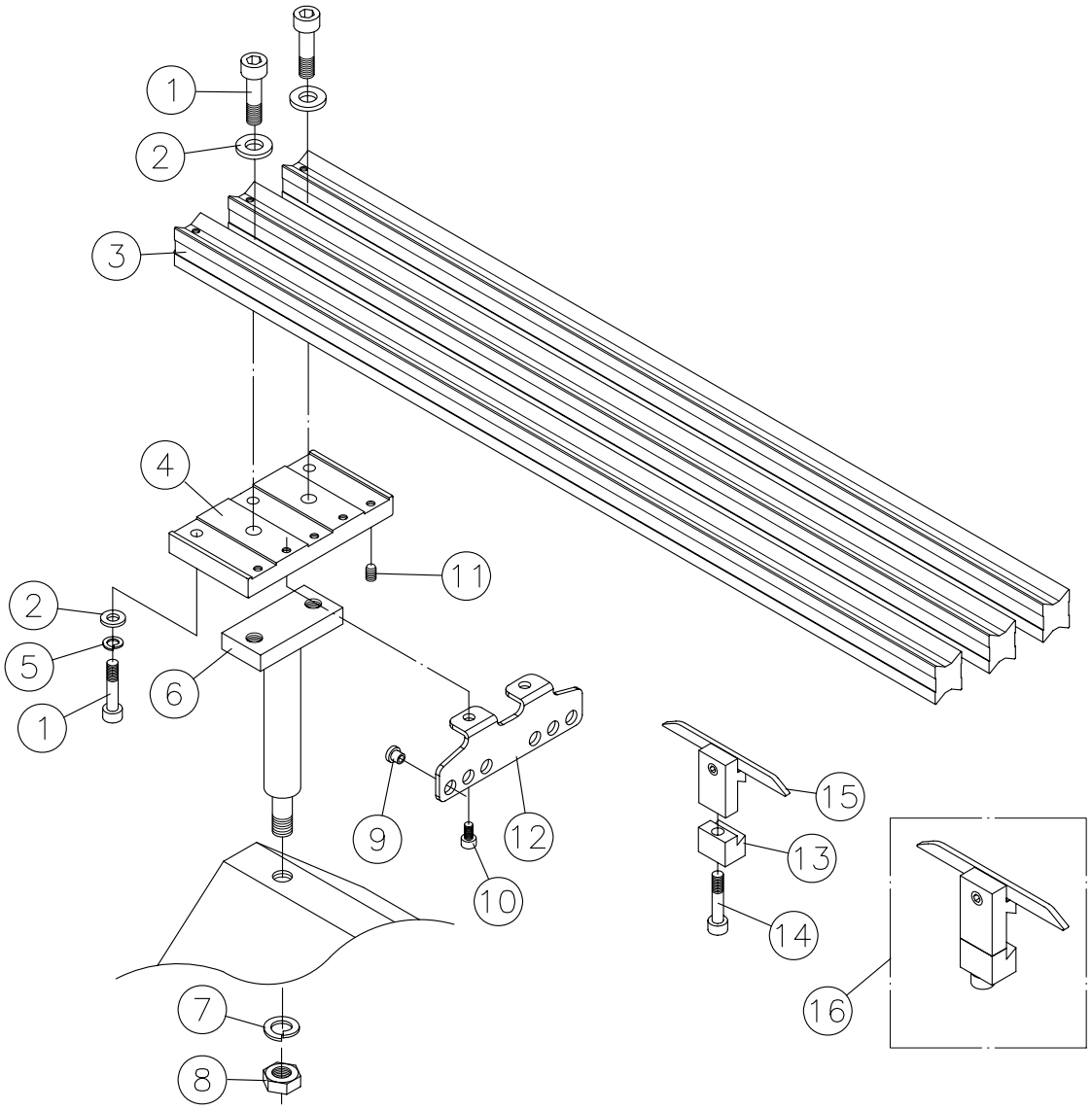

Y

No.	編號 PARTS No.	品名 PARTS NAME	數量 QTY	備註 REMARKS
1	KSC0840	SCREW <M8X40>	10	
2	KSW0008	WASHER	10	
3	KCDJ010A	CARRIER RAIL	3	
4	KCM6532	FITTING	2	
5	KSWS008	SPRING WASHER	6	
6	KCDJ008	CARRIER RAIL BRACKET	2	
7	KSWS012	SPRING WASHER	2	
8	KSN0012	NUT	2	
9	KCF9336	EYELET	12	
10	KSC0612	SCREW <M6X12>	4	
11	KSE0620	SETSCREW <M6X20>	6	
12	KCF9333	YARN GUIDE	2	
13	KCF9300A	STOPPER	12	
14	KSC0625	SCREW <M6X25>	12	
15	KCF9300B	STOPPER	12	
16	ASSN002	STOPPER ASSY.		

313Series

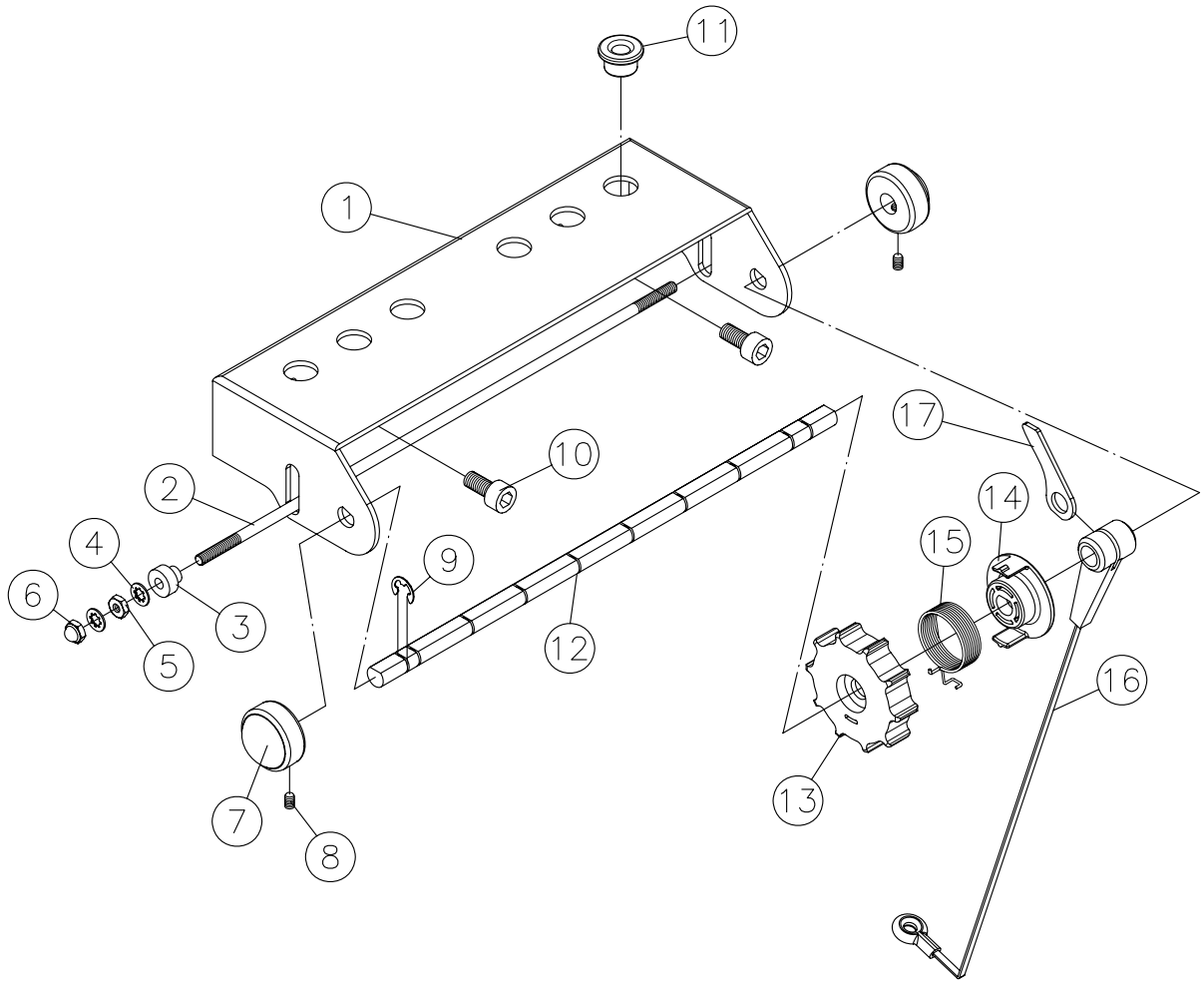

Y

No.	編號 PARTS No.	品名 PARTS NAME	數量 QTY	備註 REMARKS
1	KCW6021	SIDE TENSION BOX	2	
2	KCW6022	TROLLEY WIRE	2	
3	KCW6031	STAY HOLDER	4	
4	KSWT003	WASHER	8	
5	KSN0003	NUT	4	
6	KSN0003	NUT	4	
7	KCW6023	SIDE CAP	4	
8	KSE0406	SCREW <M4x6>	4	
9	KPE0006	E-RING	20	
10	KSC0410	SCREW <M4x10>	4	
11	KCW6024	EYELET	12	
12	KCW6025	SIDE TENSION SHAFT	2	
13	KCW6026	DIAL	12	
14	KCW6027	DIAL LOCKING PLATE	12	
15	KCW6028	KICK SPRING	12	
16	KCW6029	SIDE TENSION ASSY <10~18G>	12	
17	KCW6030	DETECTING PLATE	12	

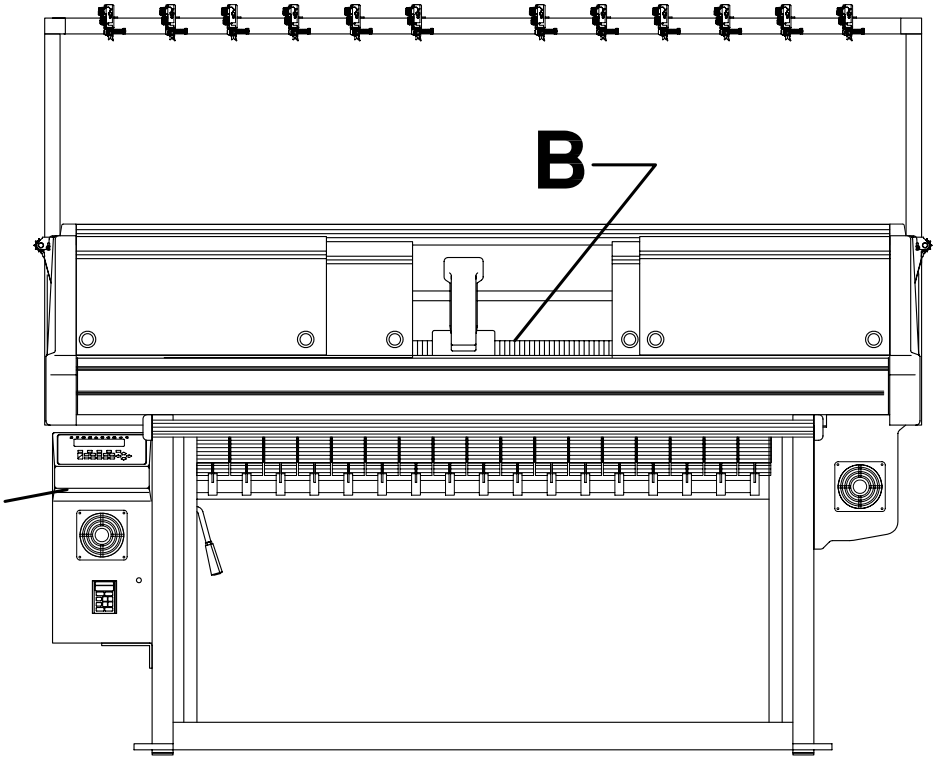

針床與搖床 /Bed & Racking Unit:

B1-B10

313Series

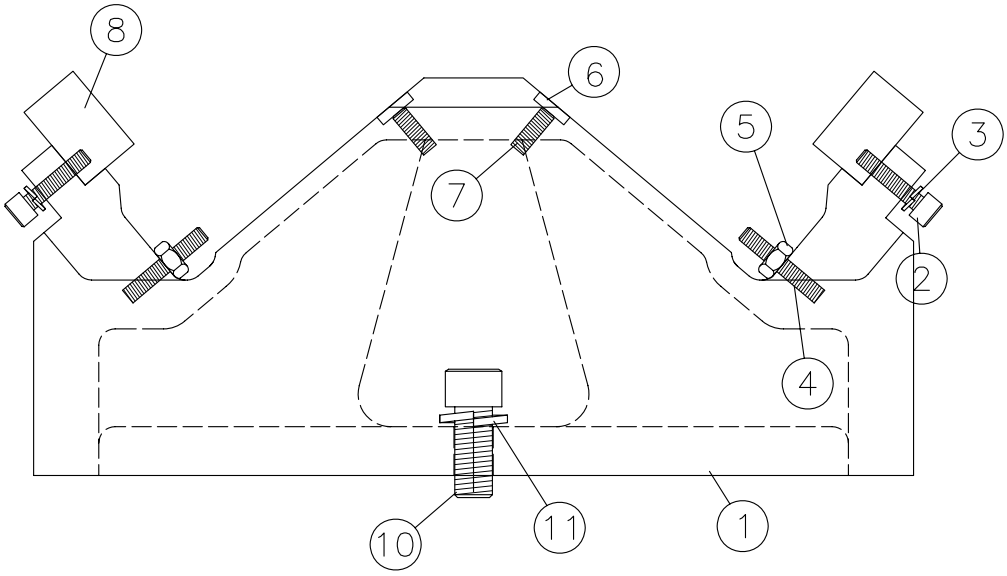

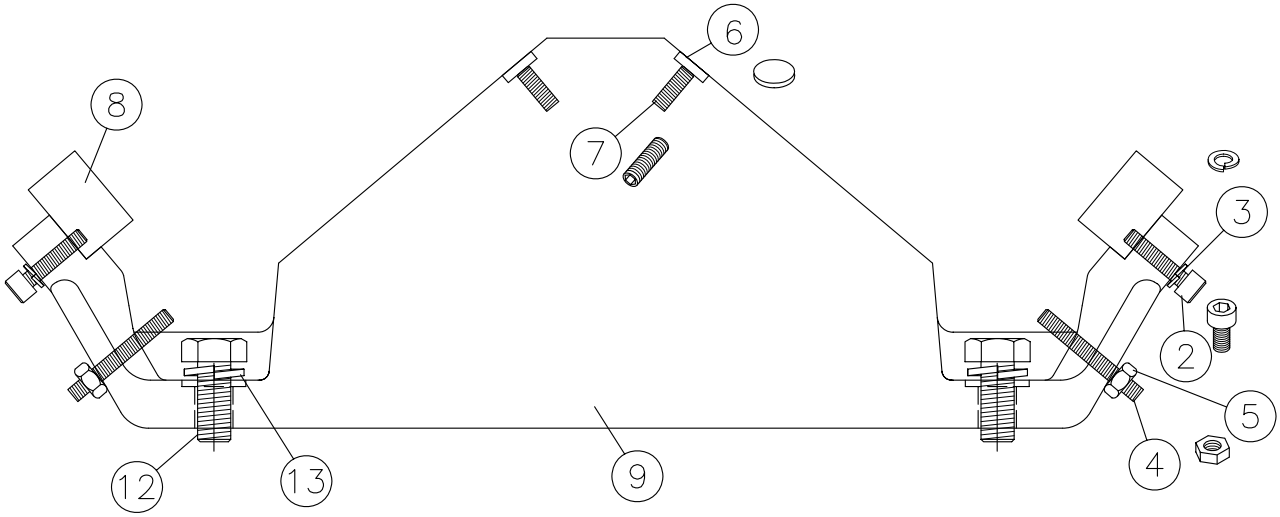

B

No.	編號 PARTS No.	品名 PARTS NAME	數量 QTY	備註 REMARKS
1	KCJ100A	BED	1	313
2	KSC0620	SCREW <M6x20>	10	
3	KSWS006	WASHER	10	
4	KSE0645	SETSCREW <M6x45>	4	
5	KSN0006	NUT	4	
6	KCF9339	PLATE	10	
7	KSE0612	SETSCREW <M6x12>	10	
8	KCDJ010B	CARRIAGE RAIL	2	30”,40”,54”
9	KCDJ100	BED	1	313J,TJ
10	KSC1230	SCREW <M12x30>	2	313
11	KSWS012	WASHER	2	313
12	KSS1030	SCREW <M10x30>	4	313J,TJ
13	KSWS010	WASHER	4	313J,TJ

313Series

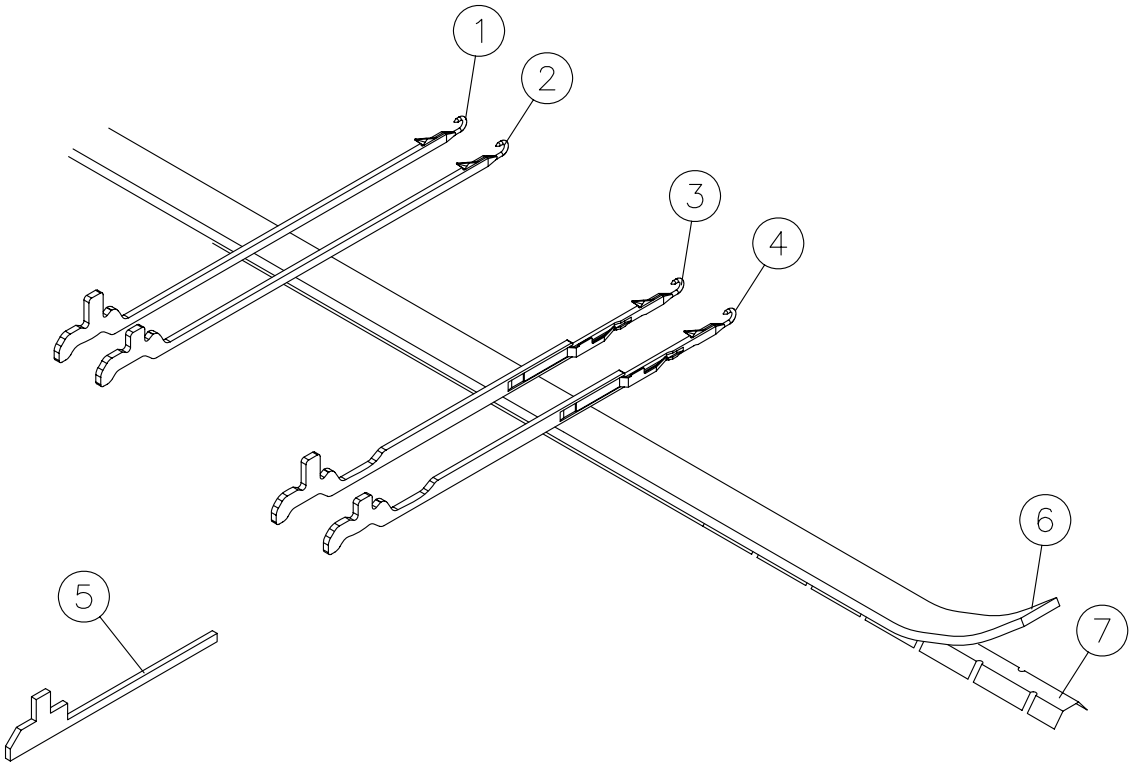

B

No.	編號 PARTS No.	品名 PARTS NAME	數量 QTY	備註 REMARKS
1	KCF9350A	HIGH BUTT NEEDLE		313&313J<5~18G>
2	KCF9351A	LOW BUTT NEEDLE		313&313J<5~18G>
3	KCF9350F	HIGH BUTT TRANSFER NEEDLE		313TJ<5~14G>
4	KCF9351F	LOW BUTT TRANSFER NEEDLE		313TJ<5~14G>
5	KCF3346A	JACK		313J&TJ<5~18G>
6	KCF9348	COTTON PLATE	2	30",40",54"
7	KCF9349	SPRING PLATE	2	313&313J

313

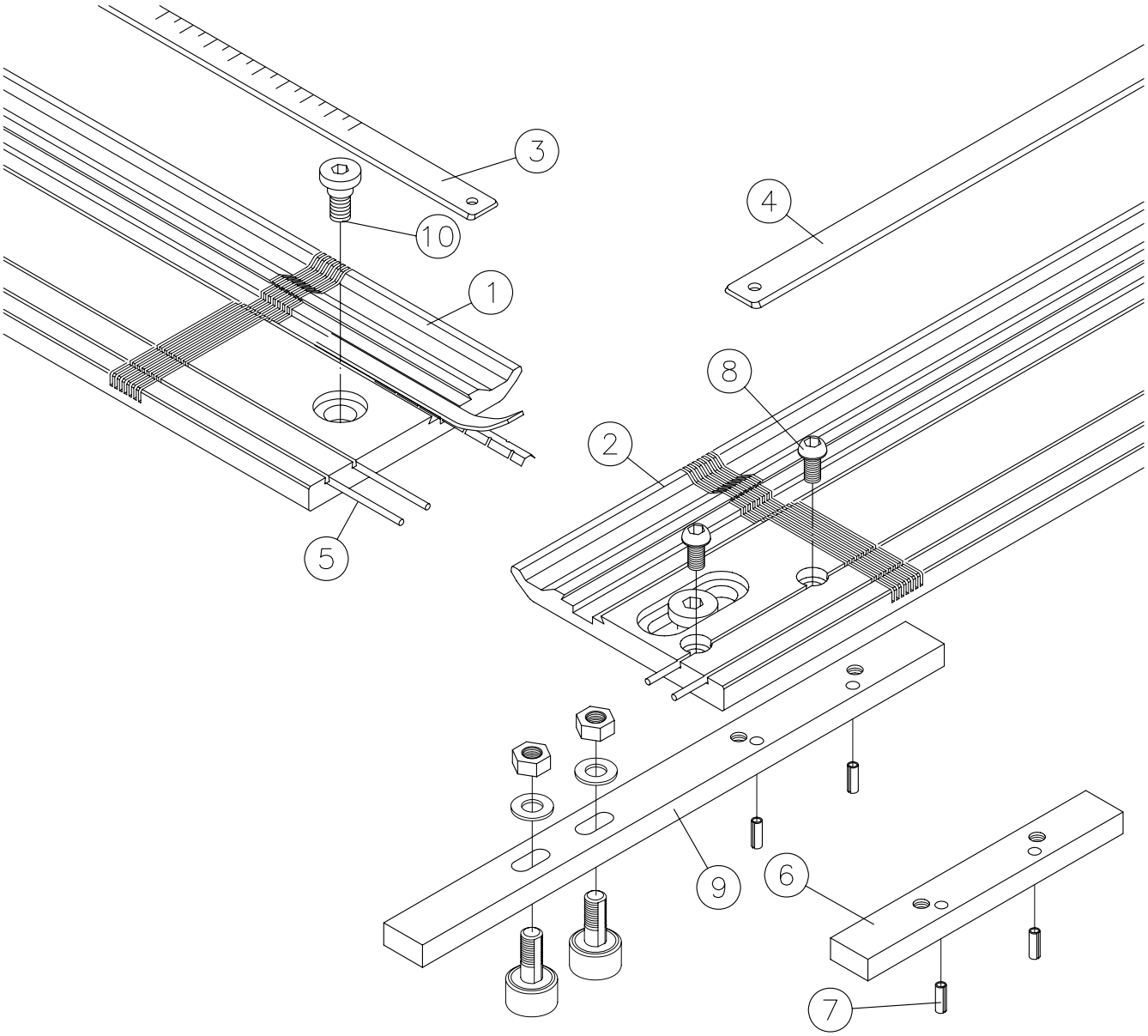

B

No.	編號 PARTS No.	品名 PARTS NAME	數量 QTY	備註 REMARKS
1	KCF9346F	NEEDLE BED <F> <5~18G>	1	30”,40”,54”
2	KCF9346B	NEEDLE BED <B> <5~18G>	1	30”,40”,54”
3	KCF9353A	NEEDLE PRESSING PLATE <F>	1	30”,40”,54”
4	KCF9353B	NEEDLE PRESSING PLATE <B>	1	30”,40”,54”
5	KCJ9354	NEEDLE PLATE WIRE	4	30”,40”,54”
6	KCF9359	RACKING SLIDING PLATE	1	
7	KPC0516	PIN	4	
8	KSC0612	SCREW <M6x12>	4	
9	KCF9357	RACKING SLIDING PLATE	1	
10	KCF9356	SCREW	4	

313J

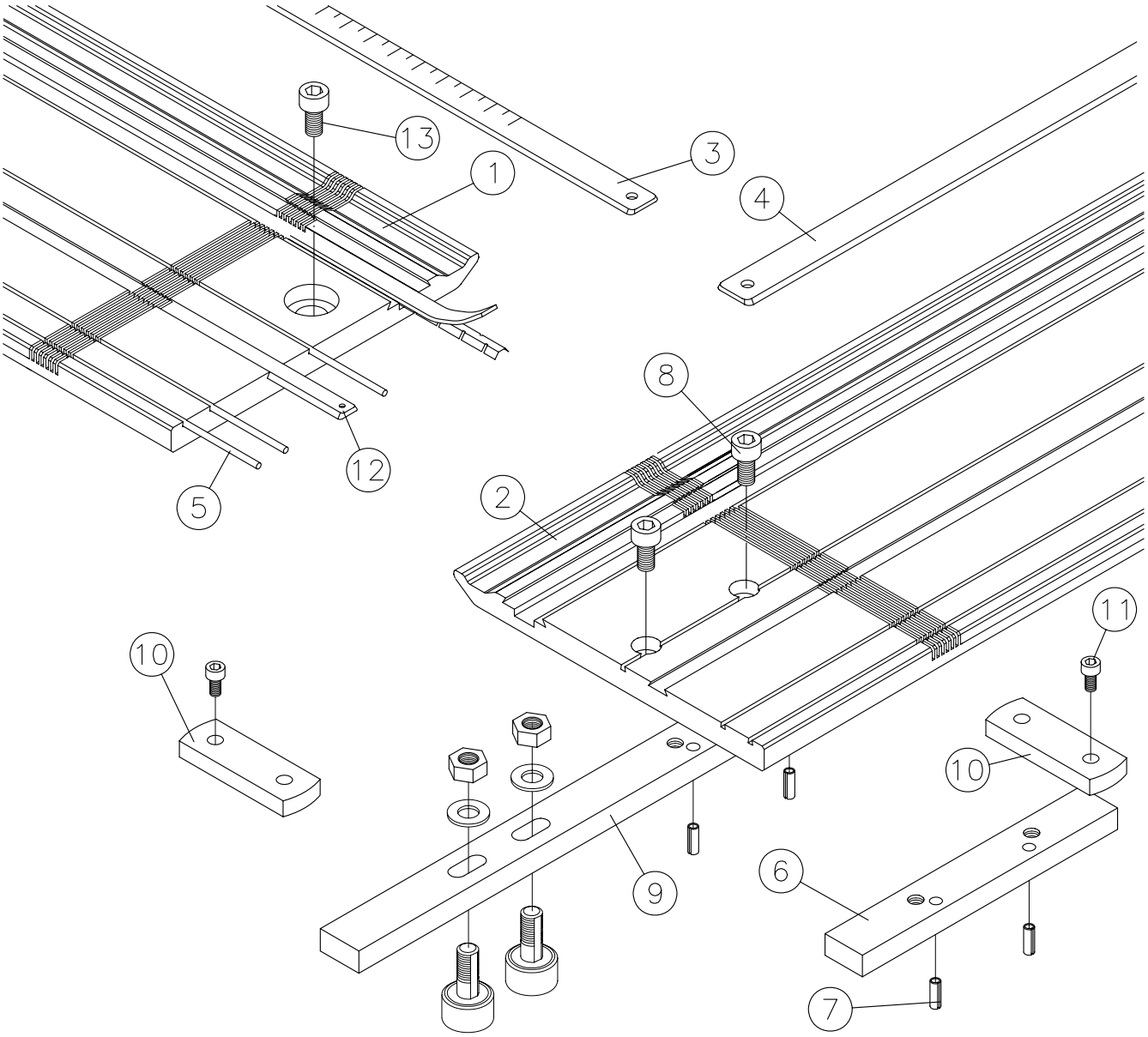

B

No.	編號 PARTS No.	品名 PARTS NAME	數量 QTY	備註 REMARKS
1	KCDJ001F	NEEDLE BED <F> <5~18G>	1	30",40",54"
2	KCDJ001B	NEEDLE BED <B> <5~18G>	1	30",40",54"
3	KCDJ9353A	NEEDLE PRESSING PLATE <F>	1	30",40",54"
4	KCDJ9353B	NEEDLE PRESSING PLATE <B>	1	30",40",54"
5	KCJ9354	NEEDLE PLATE WIRE	6	30",40",54"
6	KCDJ002B	RACKING SLIDING PLATE	1	
7	KPC0516	PIN	4	
8	KSC0612	SCREW <M6x12>	4	
9	KCDJ002A	RACKING SLIDING PLATE	1	
10	KCF9401B	BED COVER	2	
11	KSC0412	SCREW <M4x12>	4	
12	KCDJ9353C	JACK PRESSING PLATE	2	30",40",54"
13	KSC0820	SCREW <M8x20>	2	

313TJ

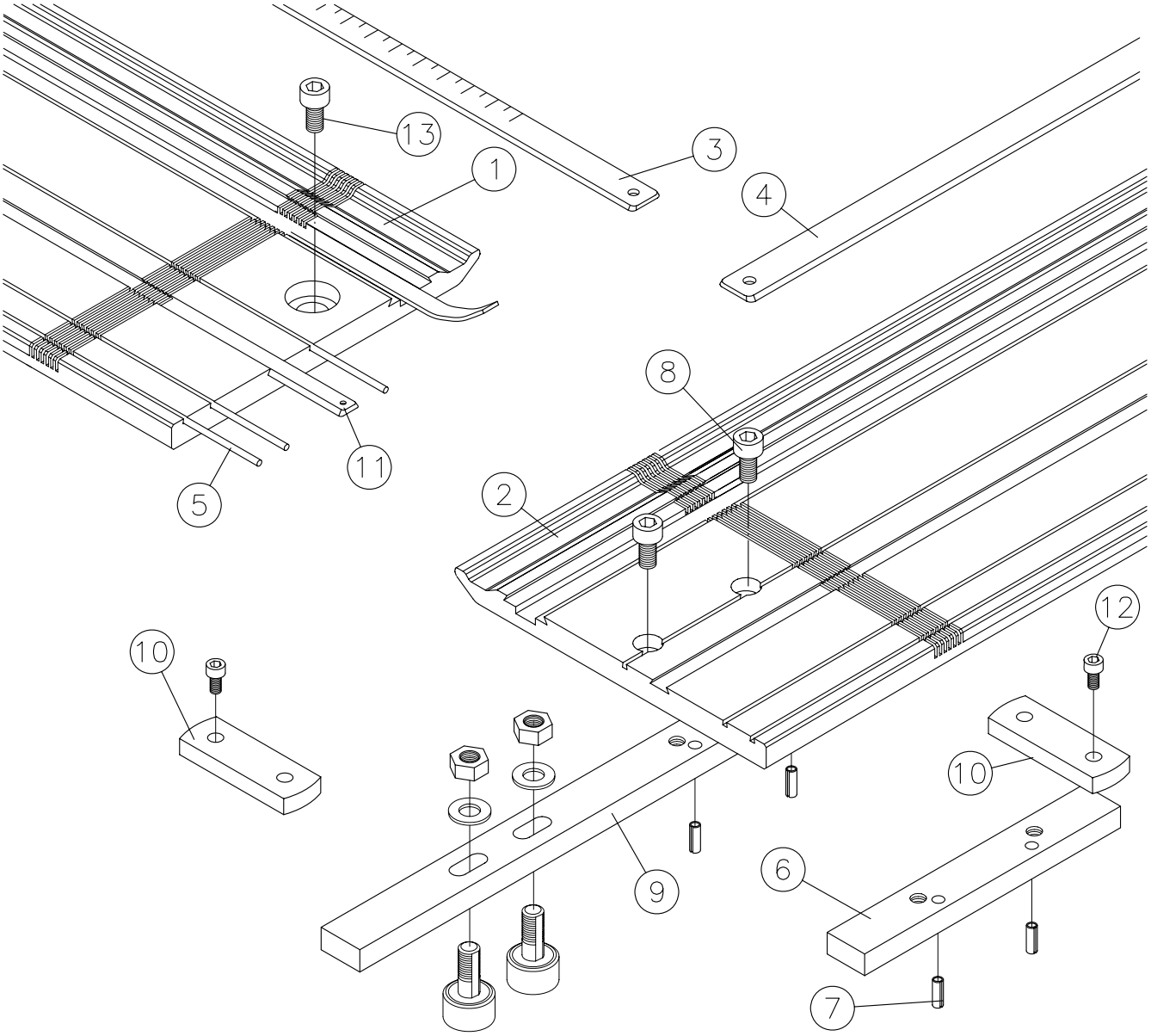

B

No.	編號 PARTS No.	品名 PARTS NAME	數量 QTY	備註 REMARKS
1	KCJT9346A	NEEDLE BED <F> <5~14G>	1	30",40",54"
2	KCJT9346B	NEEDLE BED <B> <5~14G>	1	30",40",54"
3	KCJT9353A	NEEDLE PRESSING PLATE <F>	1	30",40",54"
4	KCJT9353B	NEEDLE PRESSING PLATE <B>	1	30",40",54"
5	KCJ9354	NEEDLE PLATE WIRE	6	30",40",54"
6	KCDJ002B	RACKING SLIDING PLATE	1	
7	KPC0516	PIN	4	
8	KSC0612	SCREW <M6x12>	4	
9	KCDJ002A	RACKING SLIDING PLATE	1	
10	KCF9401B	BED COVER	2	
11	KCDJ9353C	JACK PRESSING PLATE	2	30",40",54"
12	KSC0412	SCREW <M4x12>	4	
13	KSC0820	SCREW <M8x20>	2	

313s

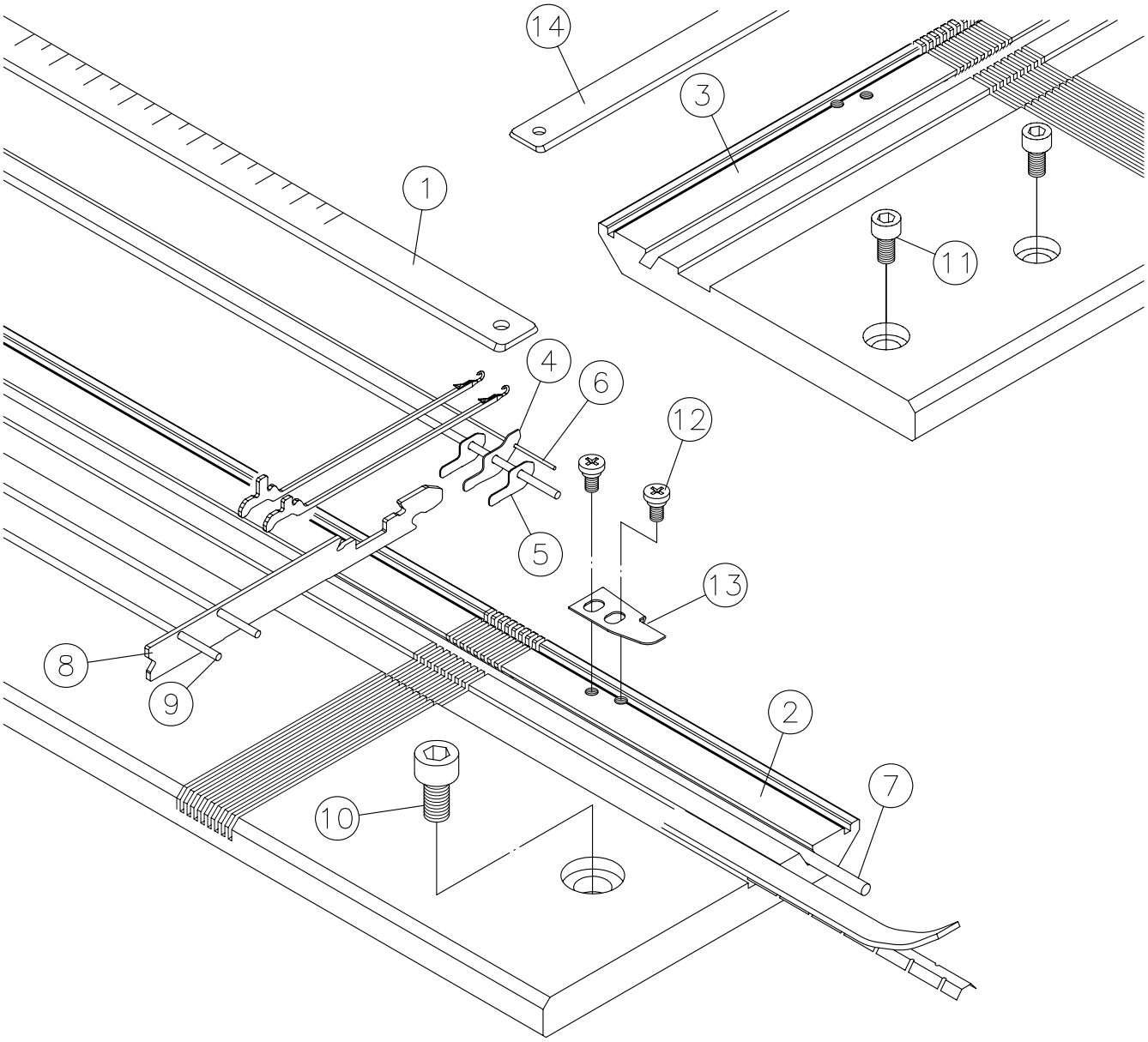

B

No.	編號 PARTS No.	品名 PARTS NAME	數量 QTY	備註 REMARKS
1	KCF9346A	NEEDLE PRESSING PLATE <F>	1	30",40",54"
2	KCF5001F	NEEDLE BED <F> <5~18G>	1	30",40",54"
3	KCF5001B	NEEDLE BED <B> <5~18G>	1	30",40",54"
4	KCJ5007	KNOCK-OVER-BIT <5~18G>		
5	KCJ5008	KNOCK-OVER-BIT <5~18G>		
6	KCF9354B	KNOCK-OVER-BIT WIRE	1	30",40",54"
7	KCF9354A	PLATE FIXING WIRE	1	30",40",54"
8	KCF5002	NEEDLE PLATE <5~18G>		
9	KCF9354C	NEEDLE PLATE WIRE	8	30",40",54"
10	KSC0820	SCREW <M8x20>	2	
11	KSC0612	SCREW <M6x12>	4	
12	KST0406	SCREW <M4X6>	8	
13	KCW6500	WIRE STOPPER <L,R>	4	
14	KCF9346B	NEEDLE PRESSING PLATE <B>	1	30",40",54"

313Js

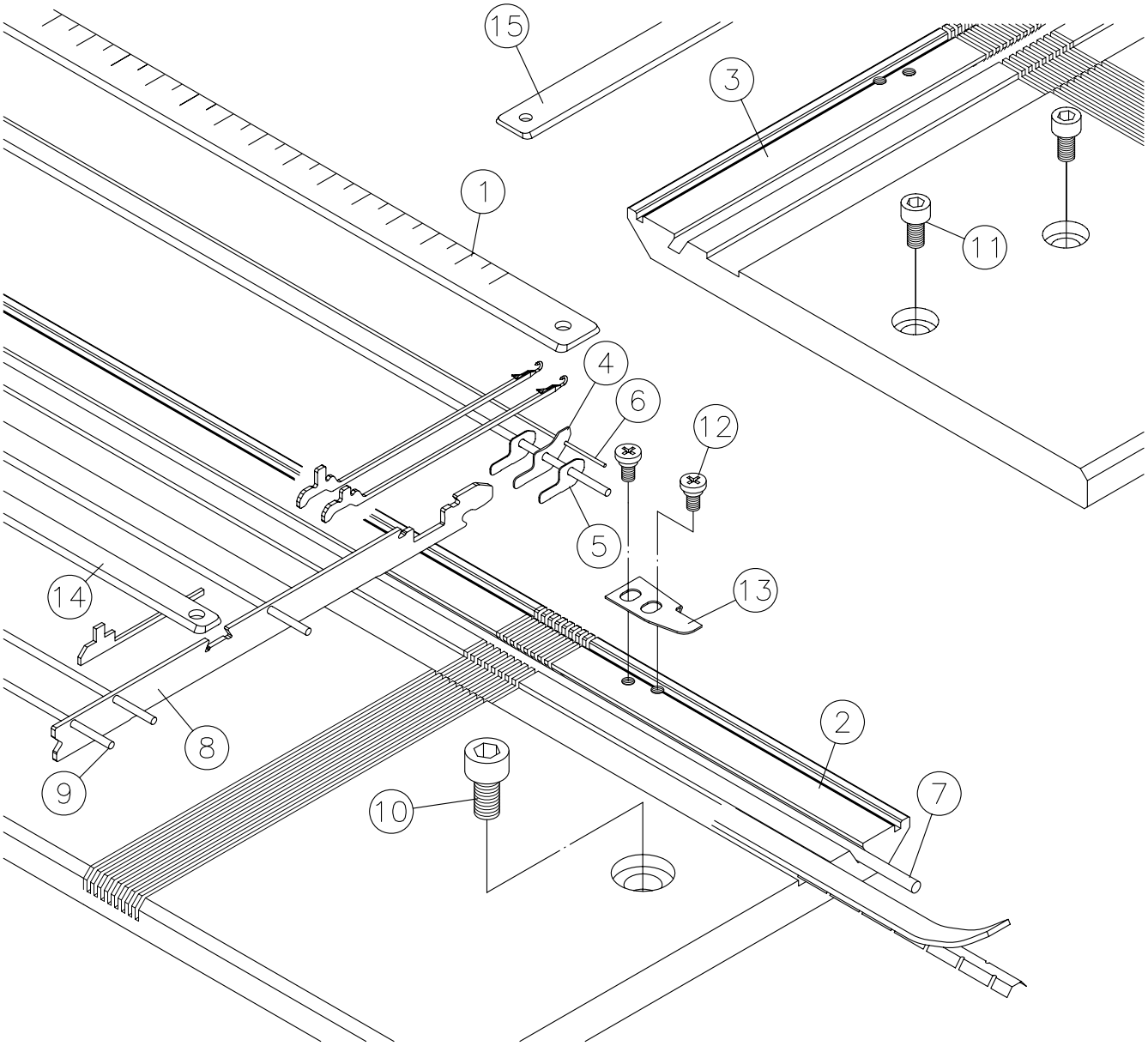

B

No.	編號 PARTS No.	品名 PARTS NAME	數量 QTY	備註 REMARKS
1	KCJ5003A	NEEDLE PRESSING PLATE <F>	1	30",40",54"
2	KCJ5100F	NEEDLE BED <F> <5~18G>	1	30",40",54"
3	KCJ5100B	NEEDLE BED <B> <5~18G>	1	30",40",54"
4	KCJ5007	KNOCK-OVER-BIT <5~18G>		
5	KCJ5008	KNOCK-OVER-BIT <5~18G>		
6	KCF9354B	KNOCK-OVER-BIT WIRE	1	30",40",54"
7	KCF9354A	PLATE FIXING WIRE	1	30",40",54"
8	KCJ5002	NEEDLE PLATE <5~18G>		
9	KCF9354C	NEEDLE PLATE WIRE	8	30",40",54"
10	KSC0820	SCREW <M8x20>	2	
11	KSC0612	SCREW <M6x12>	4	
12	KST0406	SCREW <M4X6>	8	
13	KCW6500	WIRE STOPPER <L,R>	4	
14	KCDJ9353C	JACK PRESSING PLATE	2	30",40",54"
15	KCJ5003B	NEEDLE PRESSING PLATE <B>	1	30",40",54"

313TJs

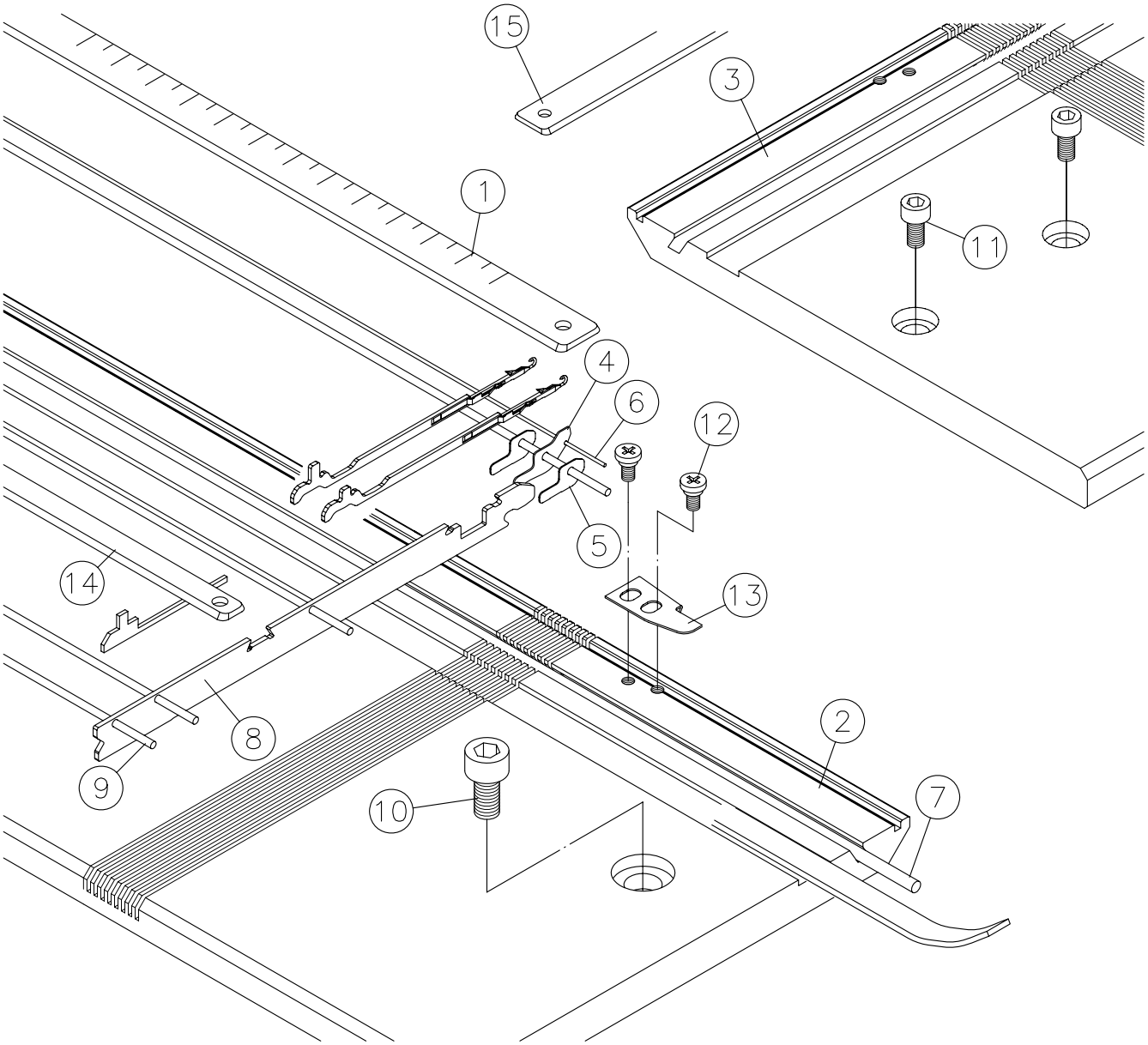

B

No.	編號 PARTS No.	品名 PARTS NAME	數量 QTY	備註 REMARKS
1	KCJT503A	NEEDLE PRESSING PLATE <F>	1	30",40",54"
2	KCJ5100F	NEEDLE BED <F> <5~14G>	1	30",40",54"
3	KCJ5100B	NEEDLE BED <B> <5~14G>	1	30",40",54"
4	KCJ5007	KNOCK-OVER-BIT <5~14G>		
5	KCJ5008	KNOCK-OVER-BIT <5~14G>		
6	KCF9354B	KNOCK-OVER-BIT WIRE	1	30",40",54"
7	KCF9354A	PLATE FIXING WIRE	1	30",40",54"
8	KCJT502	NEEDLE PLATE <5~14G>		
9	KCF9354C	NEEDLE PLATE WIRE	8	30",40",54"
10	KSC0820	SCREW <M8x20>	2	
11	KSC0612	SCREW <M6x12>	4	
12	KST0406	SCREW <M4X6>	8	
13	KCW6500	WIRE STOPPER <L,R>	4	
14	KCDJ9353C	JACK PRESSING PLATE	2	30",40",54"
15	KCJT503B	NEEDLE PRESSING PLATE <B>	1	30",40",54"

313Series

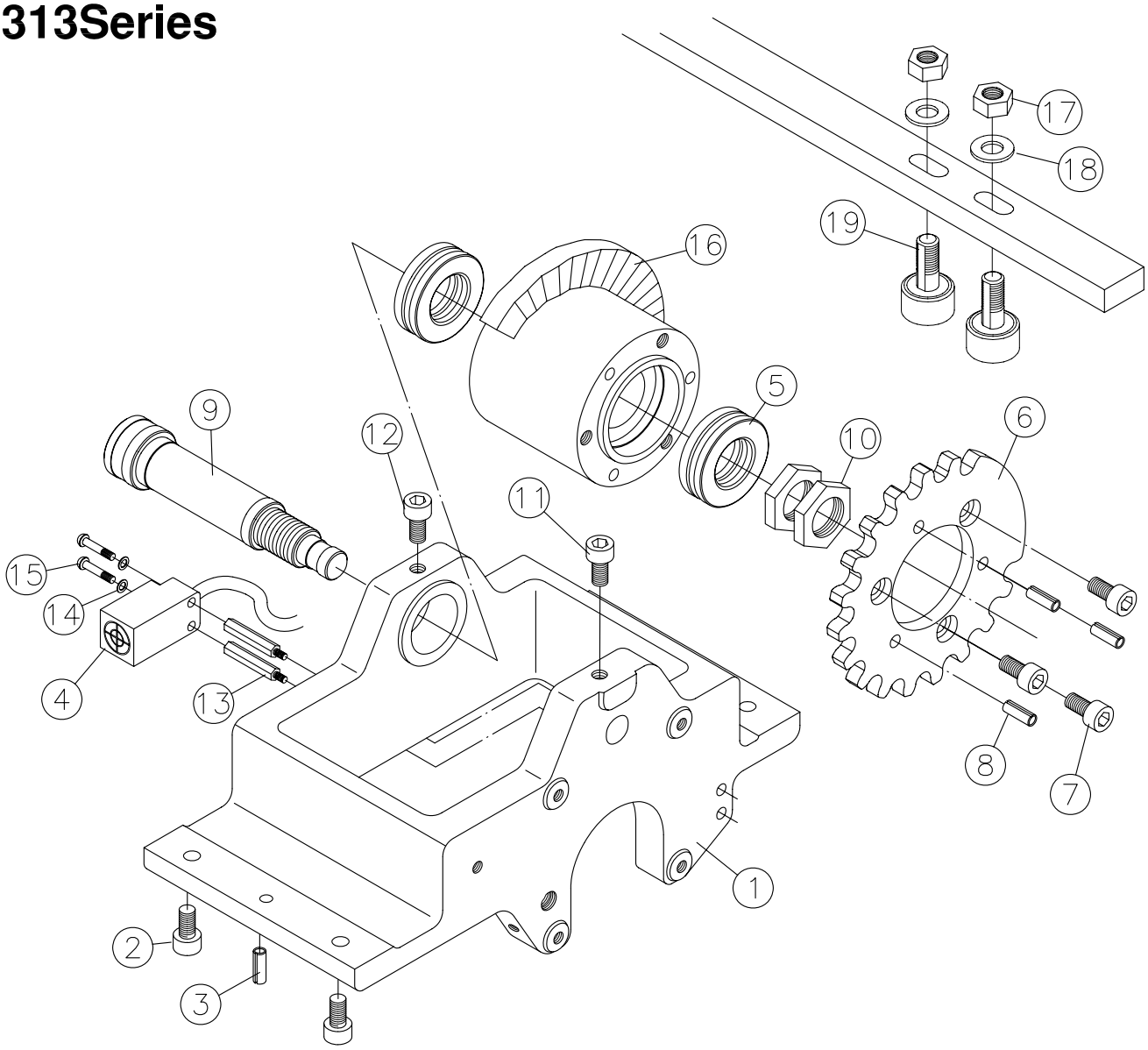

B

No.	編號 PARTS No.	品名 PARTS NAME	數量 QTY	備註 REMARKS
1	KCF9394	SHAFT BRACKET	1	
2	KSC0625	SCREW <M6x25>	4	
3	KPC0520	PIN	2	
4	KCF9407	SENSOR	1	
5	KTB2904	THRUST BEARING	2	
6	KCF9399	RACKING GEAR	1	
7	KSC0516	SCREW <M5x16>	3	
8	KPC0612	PIN	3	
9	KCF9392	RACKING SHAFT	1	
10	KCF9393	NUT	2	
11	KSC0620	SCREW <M6x20>	1	
12	KSC0616	SCREW <M6x16>	1	
13	KCF9425	SPACER	2	
14	KSW0003	WASHER	2	
15	KSC0316	SCREW <M3x16>	2	
16	KCF9405	RACKING CAM <5~18G>	1	
17	KSN0008	NUT	2	
18	KSW0008	WASHER	2	
19	KCF9361	BEARING	2	

313Series

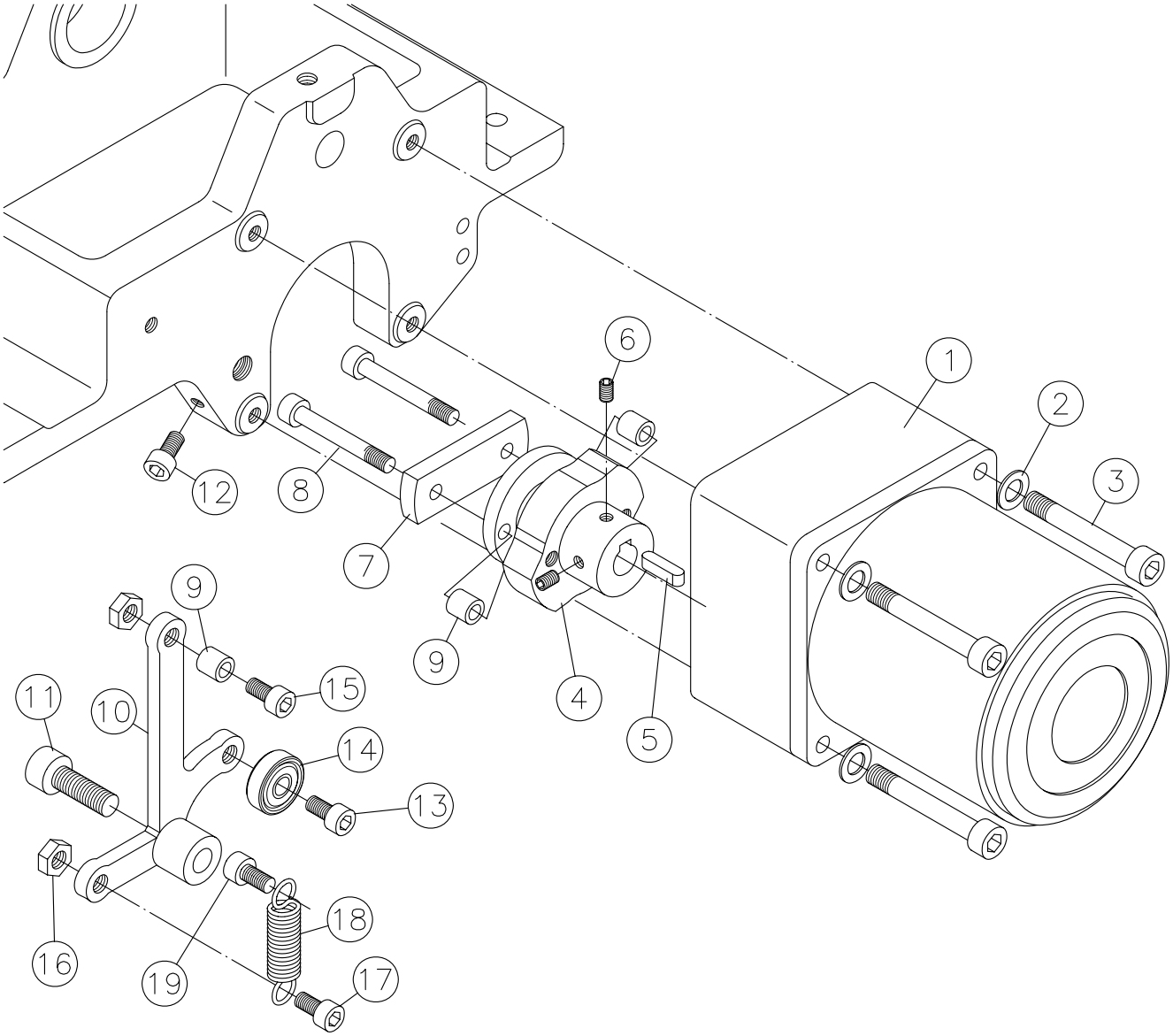

B

No.	編號 PARTS No.	品名 PARTS NAME	數量 QTY	備註 REMARKS
1	KCF9397	RACKING MOTOR	1	
2	KSW0005	WASHER	4	
3	KSC0540	SCREW <M5x40>	4	
4	KCF9401	CAM	1	
5	KEY0004	KEY	1	
6	KSE0410	SETSCREW <M4x10>	2	
7	KCF9401B	SENSOR BRACKET	1	
8	KSC0530	SCREW <M5x30>	2	
9	KCF9403	COLLAR	3	
10	KCF9414	FITTING GEAR LEVER	1	
11	KSC0830	SCREW <M8x30>	1	
12	KSC0616	SCREW <M6x16>	1	
13	KSC0610	SCREW <M6x10>	1	
14	KCB0626	BALL BEARING	1	
15	KSC0516	SCREW <M5x16>	1	
16	KSN0005	NUT	2	
17	KSC0516	SCREW <M5x16>	1	
18	KCF9422	PULL SPRING	1	
19	KSC0530	SCREW <M5x30>	1	

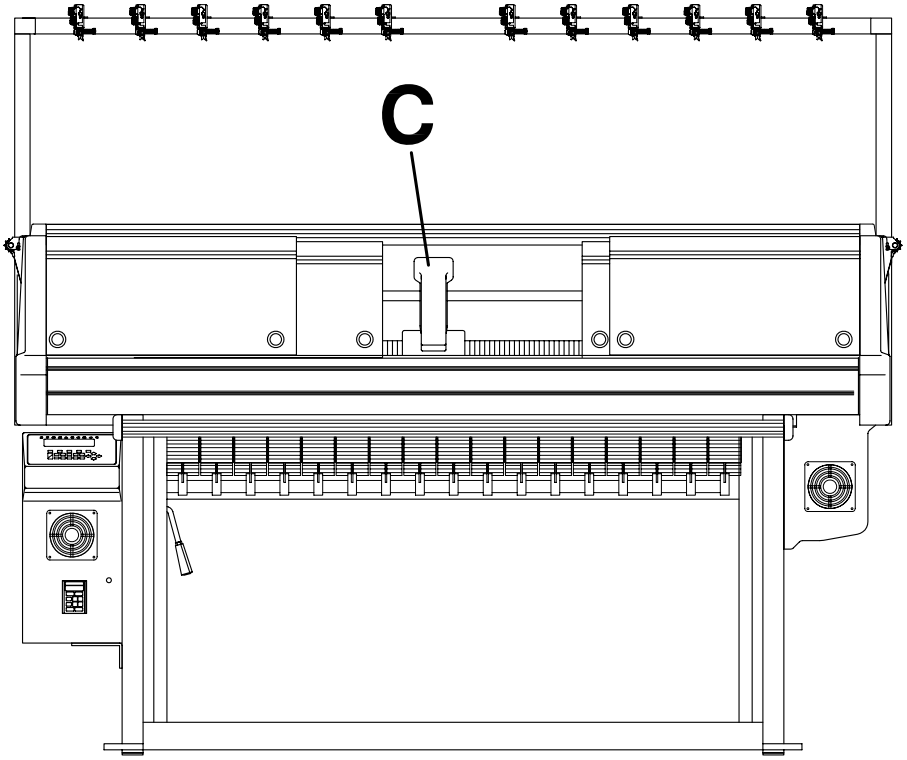

機頭部份 /Carriage:

C1-C15

313

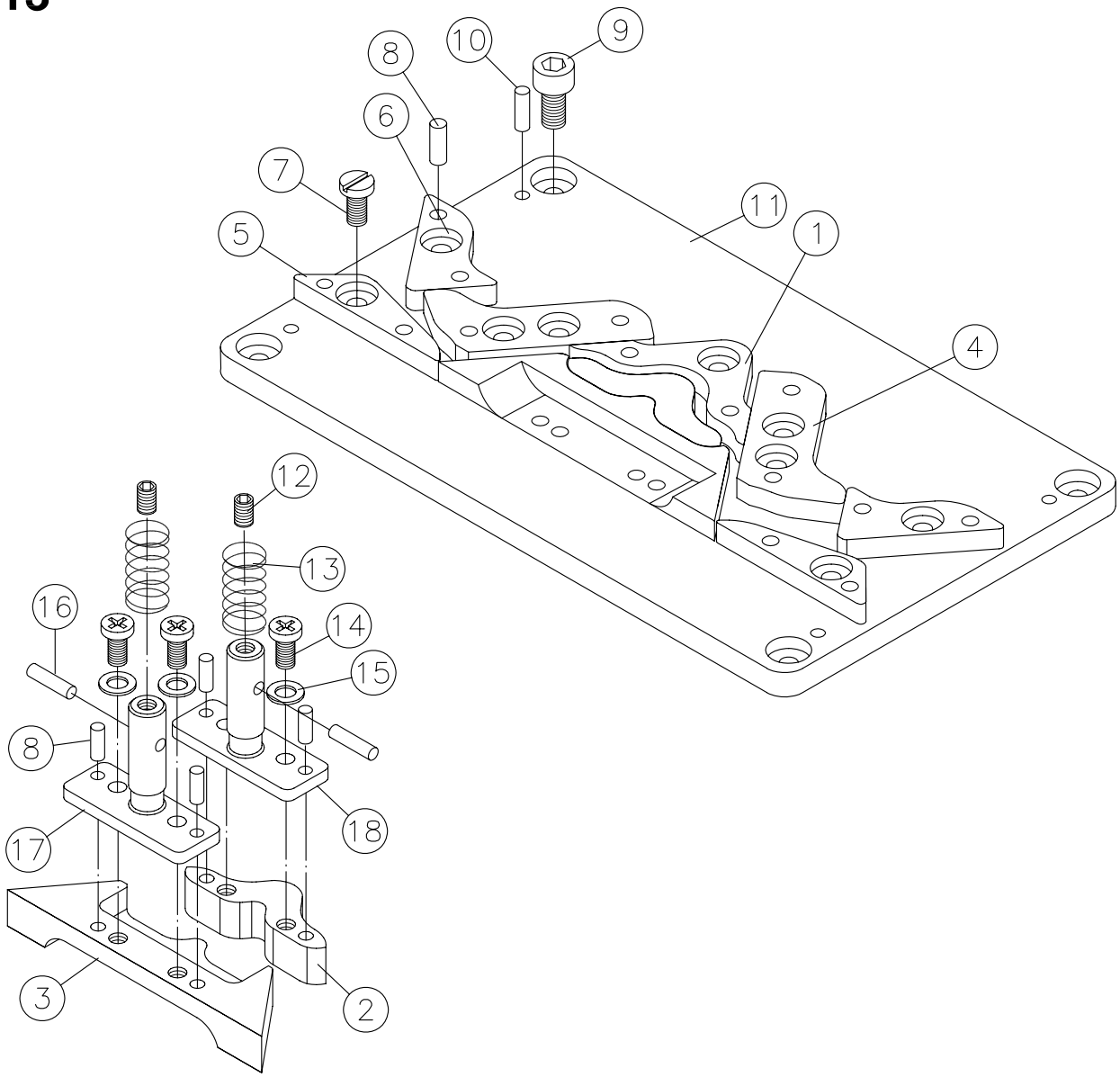

No.	編號 PARTS No.	品名 PARTS NAME	數量 QTY	備註 REMARKS
1	KCF9161	BRIDGE CAM	2	
2	KCF9183	NEEDLE CLEARING CAM	2	
3	KCF9195	NEEDLE RAISING CAM	2	
4	KCF9164	STITCH CAM <L,R>	2	
5	KCF9201	NEEDLE GUIDE CAM <L,R>	2	
6	KCF9192	STITCH GUIDE CAM <L,R>	1	
7	KSP0406	SCREW <M4x6>	18	
8	KPI0309	PIN	28	
9	KSC0512	SCREW <M5x12>	8	
10	KPI0309	PIN	8	
11	KCF9159	CAM PLATE	2	
12	KSE0404	SETSCREW <M4x4>	4	
13	KCF9188	PUSH SPRING	4	
14	KSP0406	SCREW <M4x6>	8	
15	KSW0004	WASHER	8	
16	KPI0314	PIN	4	
17	KCF9184	RAISING CAM SHANK	2	
18	KCF9196	CLEARING CAM SHANK	2	

C

313J

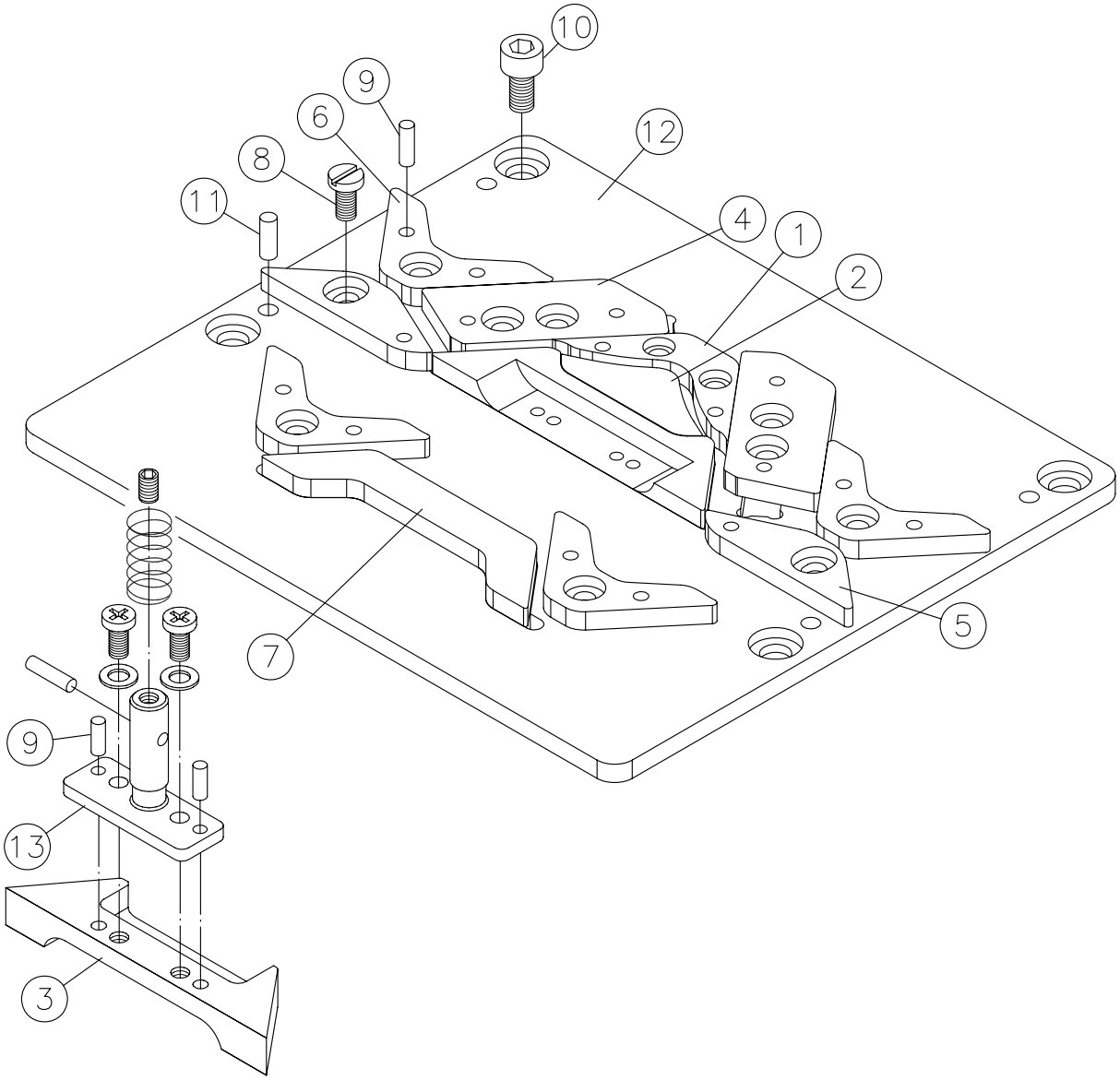

C

No.	編號 PARTS No.	品名 PARTS NAME	數量 QTY	備註 REMARKS
1	KCJ9161	BRIDGE CAM	2	
2	KCJ9183	NEEDLE CLEARING CAM	2	
3	KCJ9195	NEEDLE RAISING CAM	2	
4	KCJ9164	STITCH CAM <L,R>	2	
5	KCJ9201	NEEDLE GUIDE CAM <L,R>	2	
6	KCJ9189	STITCH GUIDE CAM	8	
7	KCJ9082	JACK RAISING CAM	2	
8	KSP0406	SCREW <M4x6>	18	
9	KPI0309	PIN	28	
10	KSC0512	SCREW <M5x12>	8	
11	KPI0309	PIN	8	
12	KCJ9159	CAM PLATE	2	
13	KCF9196	CLEARING CAM SHANK	2	

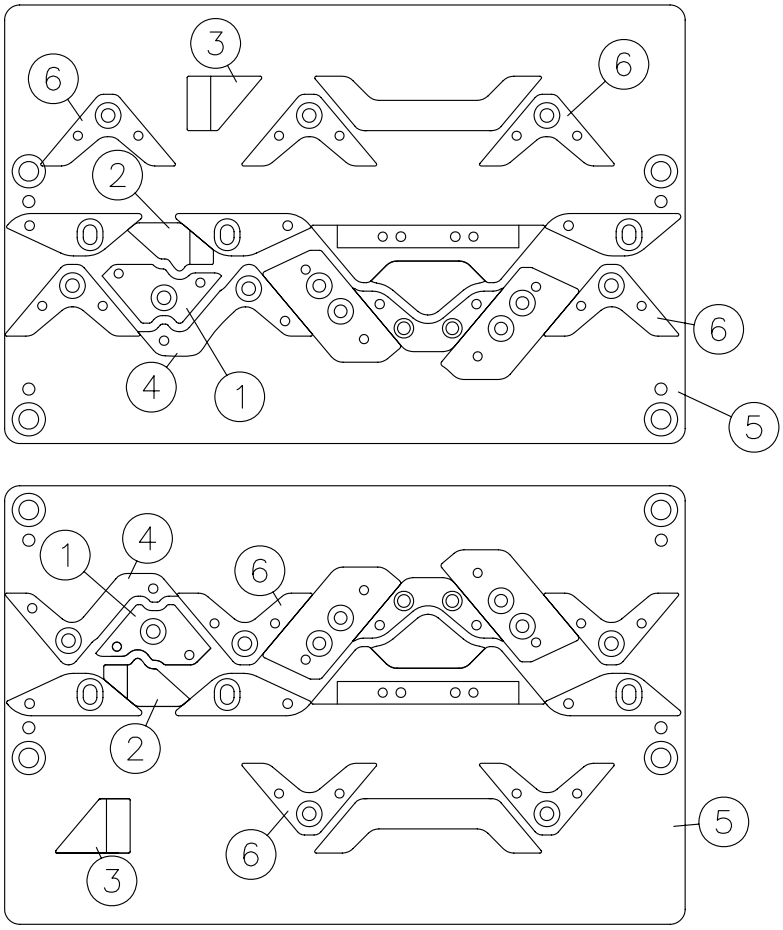

No.	編號 PARTS No.	品名 PARTS NAME	數量 QTY	備註 REMARKS
1	KCG9159C	TRANSFER GUIDE CAM	2	
2	KCG9159D	NEEDIE PAISING CAM	2	
3	KCG9159E	NEEDIE PAISING CAM	2	
4	KCG9159F	TRANSFER GUIDE CAM	2	
5	KCG9159A	CAM PLATE <F,B>	2	
6	KCG9189	STITCH GUIDE CAM	9	

C

313Series

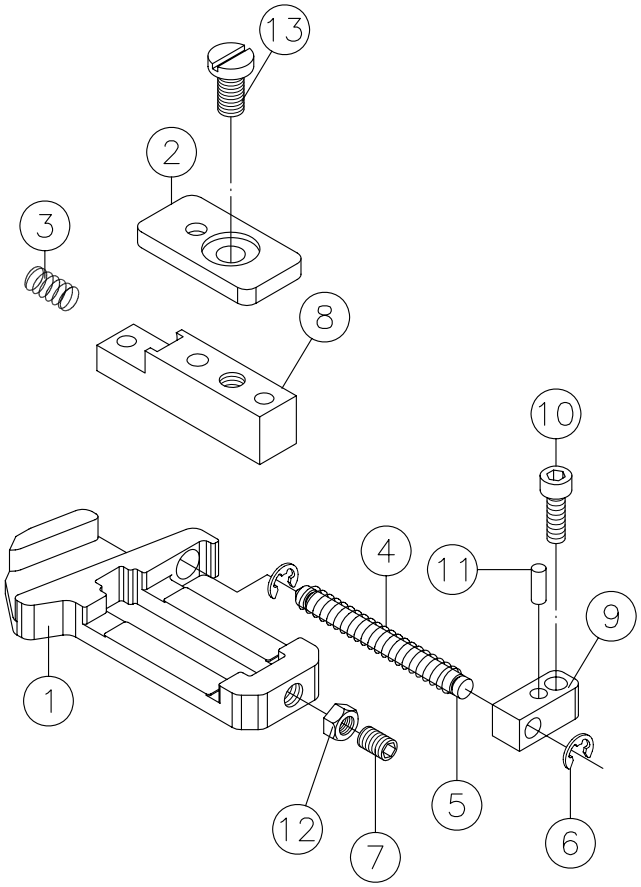

C

No.	編號 PARTS No.	品名 PARTS NAME	數量 QTY	備註 REMARKS
1	KCF9167	STITCH CAM CONTROL PLATE <L,R>	4	
2	KCF9174B	HOLDING PLATE	4	
3	KCF9205	PUSH SPRING	4	
4	KCF9172	PUSH SPRING	4	
5	KCF9171	PIN	4	
6	KPE0003	E-RING	8	
7	KSE0412	SETSCREW <M4x12>	4	
8	KCF9174A	STITCH CAM DOWEL	4	
9	KCF9168	PIN SETTING PLATE	4	
10	KSC0412	SCREW <M4x12>	4	
11	KPI0309	PIN	4	
12	KSN0004	NUT	4	
13	KSP0406	SCREW <M4x6>	4	

313Series

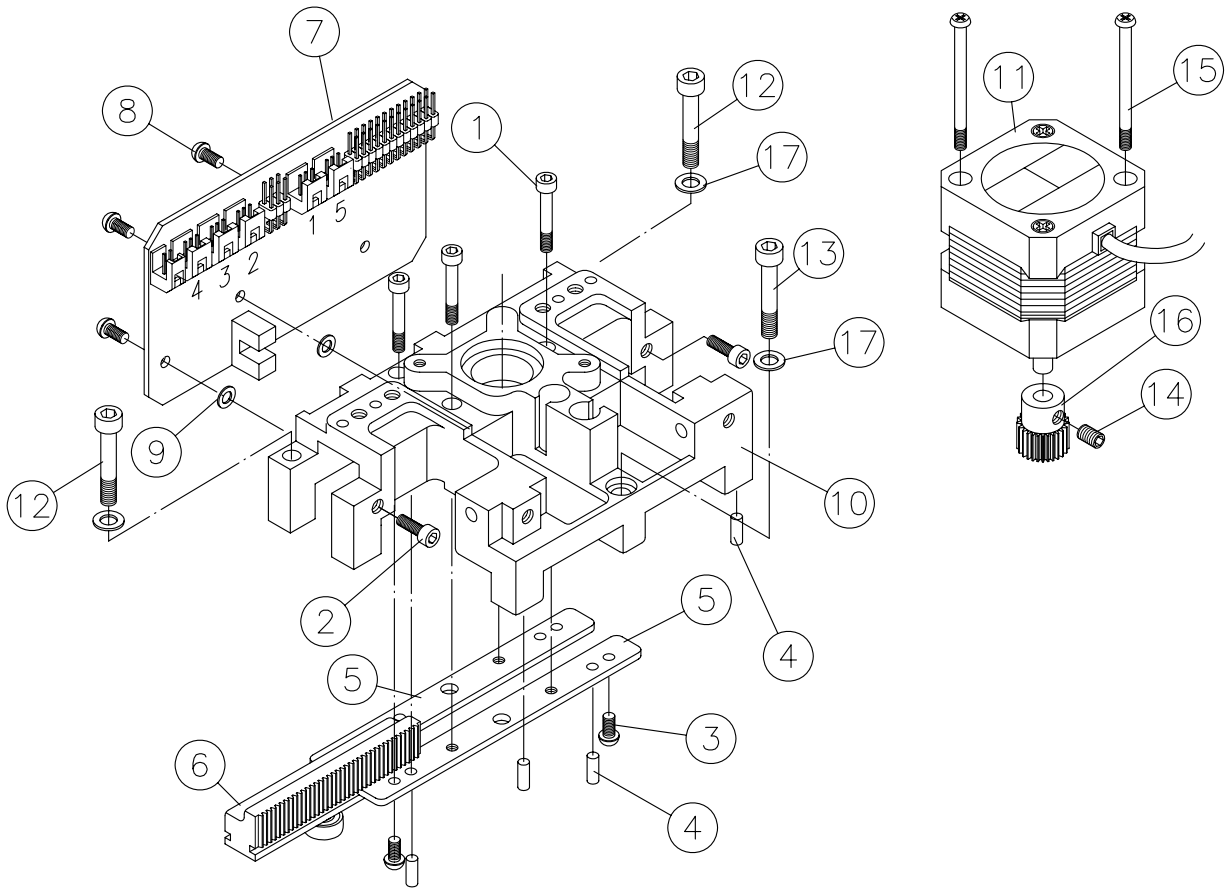

No.	編號 PARTS No.	品名 PARTS NAME	數量 QTY	備註 REMARKS
1	KSC0310	SCREW <M3x10>	8	
2	KPC0318	PIN	4	
3	KSR0305	SCREW <M3x5>	8	
4	KPI0308	PIN	16	
5	KCF9147	HOLDING PLATE	4	
6	KCF9145	STITCH CONTROL TEETH PLATE	2	
7	KCE0002	PC BOARD	2	
8	KSR0308	SCREW <M3x8>	6	
9	KSWB003	WASHER	6	
10	KCF9141	CAM BRACKET	2	
11	KCM2004A	STEPPING MOTOR	2	
12	KSC0425	SCREW <M4x25>	4	
13	KSC0420	SCREW <M4x20>	2	
14	KSE0404	SETSCREW <M4x4>	2	
15	KSR1040	SCREW <M3x40>	4	
16	KCF9143	GEAR	2	
17	KSW0004	WASHER	6	

C

313Series

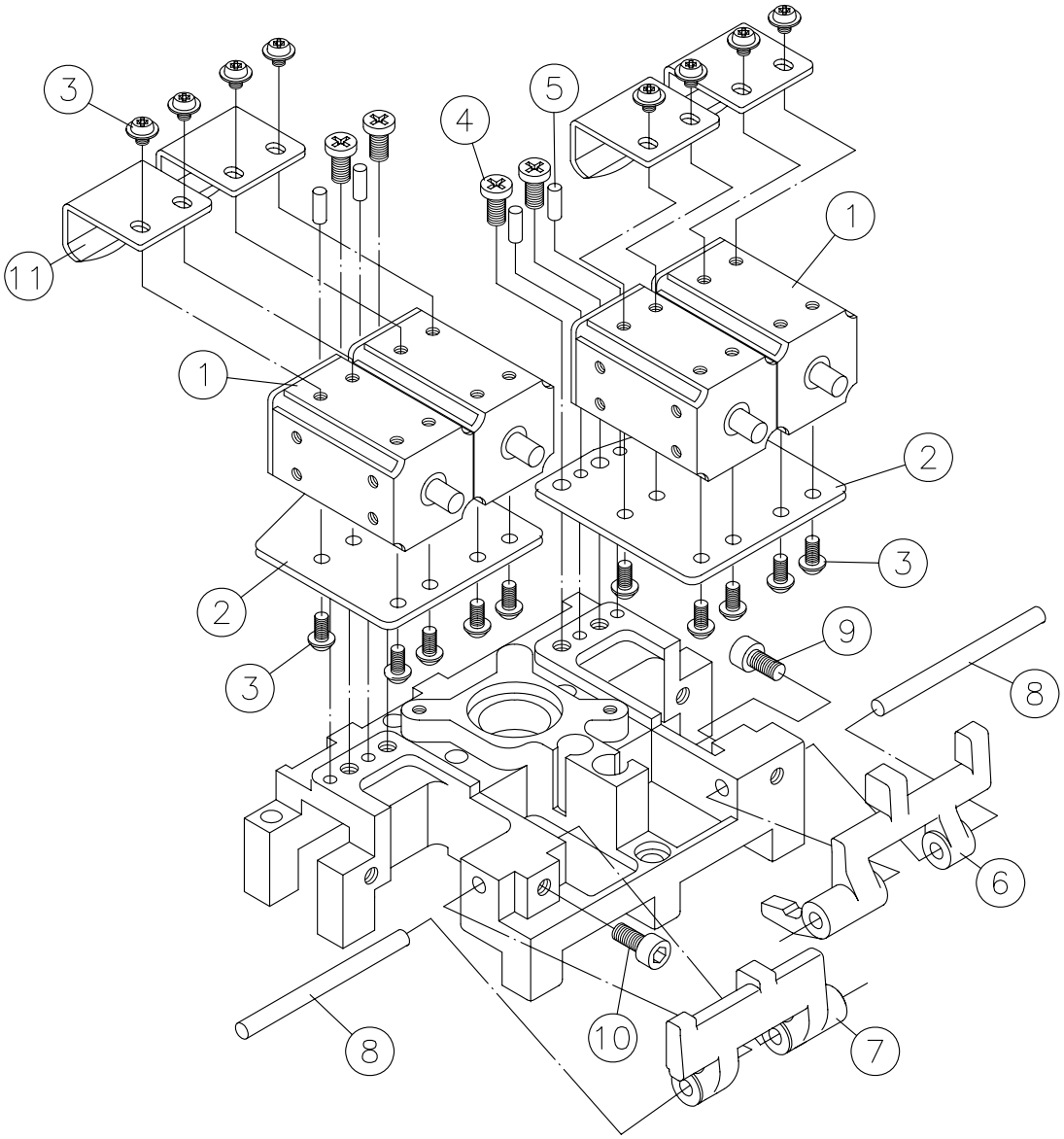

C

No.	編號 PARTS No.	品名 PARTS NAME	數量 QTY	備註 REMARKS
1	KCE2501	SOLENOID	8	
2	KCF9135	SOLENOID FITTING PLATE	4	
3	KSR0304	SCREW <M3x4>	48	
4	KSP0406	SCREW <M4x6>	8	
5	KPI0309	PIN	8	
6	KCF9177	CAM EXCHANGE LEVER	2	
7	KCF9176	CAM EXCHANGE LEVER	2	
8	KCF9178	PIN	4	
9	KSC0412	SCREW <M4x12>	2	
10	KSC0408	SCREW <M4x8>	2	
11	KCF9091	PLUNGER STOPPER	2	

313J

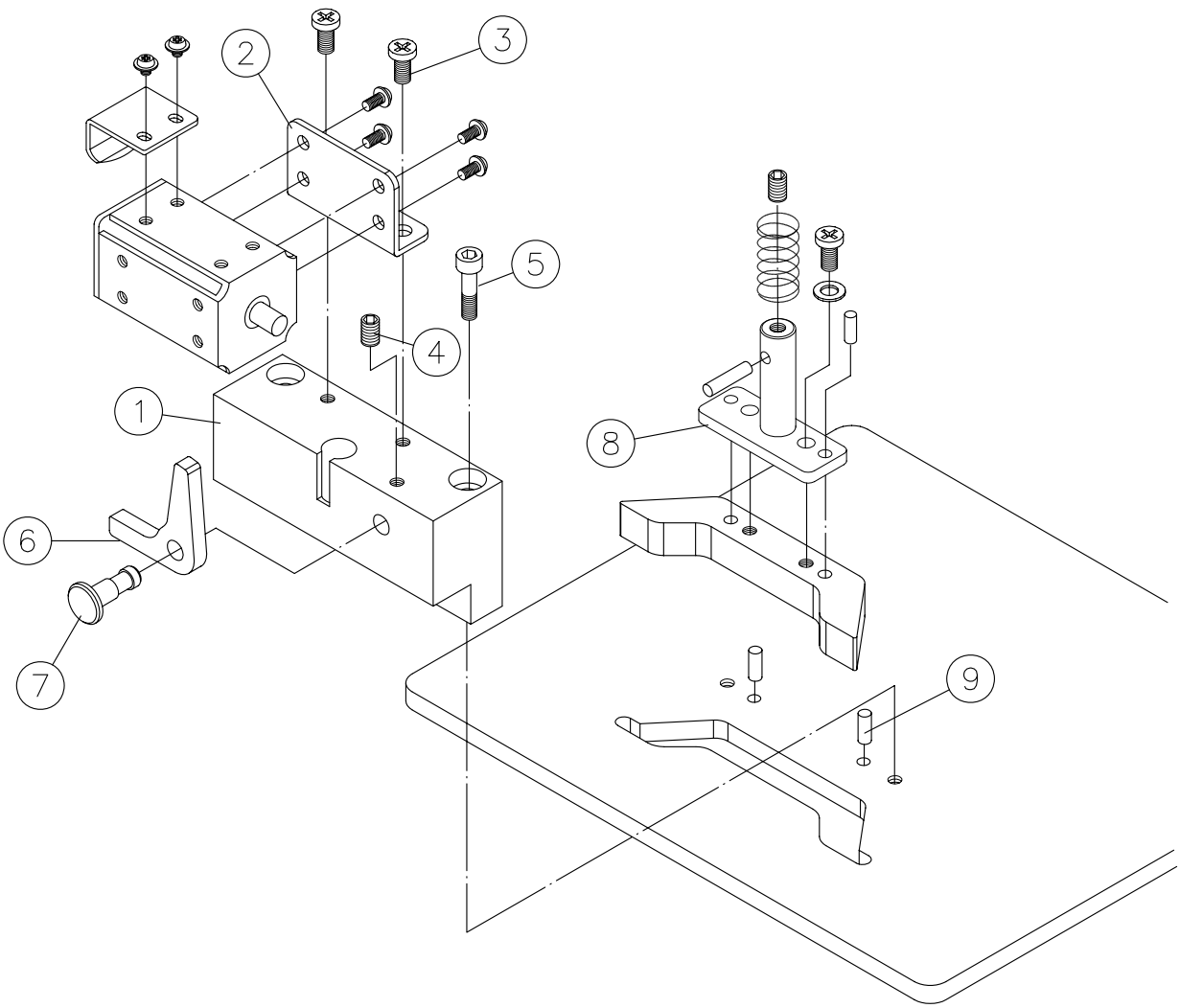

No.	編號 PARTS No.	品名 PARTS NAME	數量 QTY	備註 REMARKS
1	KCJ9141	CAM BRACKET	2	
2	KCJ9135	SOLENOID FITTING PLATE	2	
3	KSP0406	SCREW <M4x6>	4	
4	KSE0404	SETSCREW <M4x4>	2	
5	KSC0420	SCREW <M4x20>	4	
6	KCJ9177	CAM EXCHANGE LEVER	2	
7	KCJ9178	PIN	2	
8	KCJ9196	CAM SHANK	2	
9	KPI0309	PIN	4	

C

313TJ

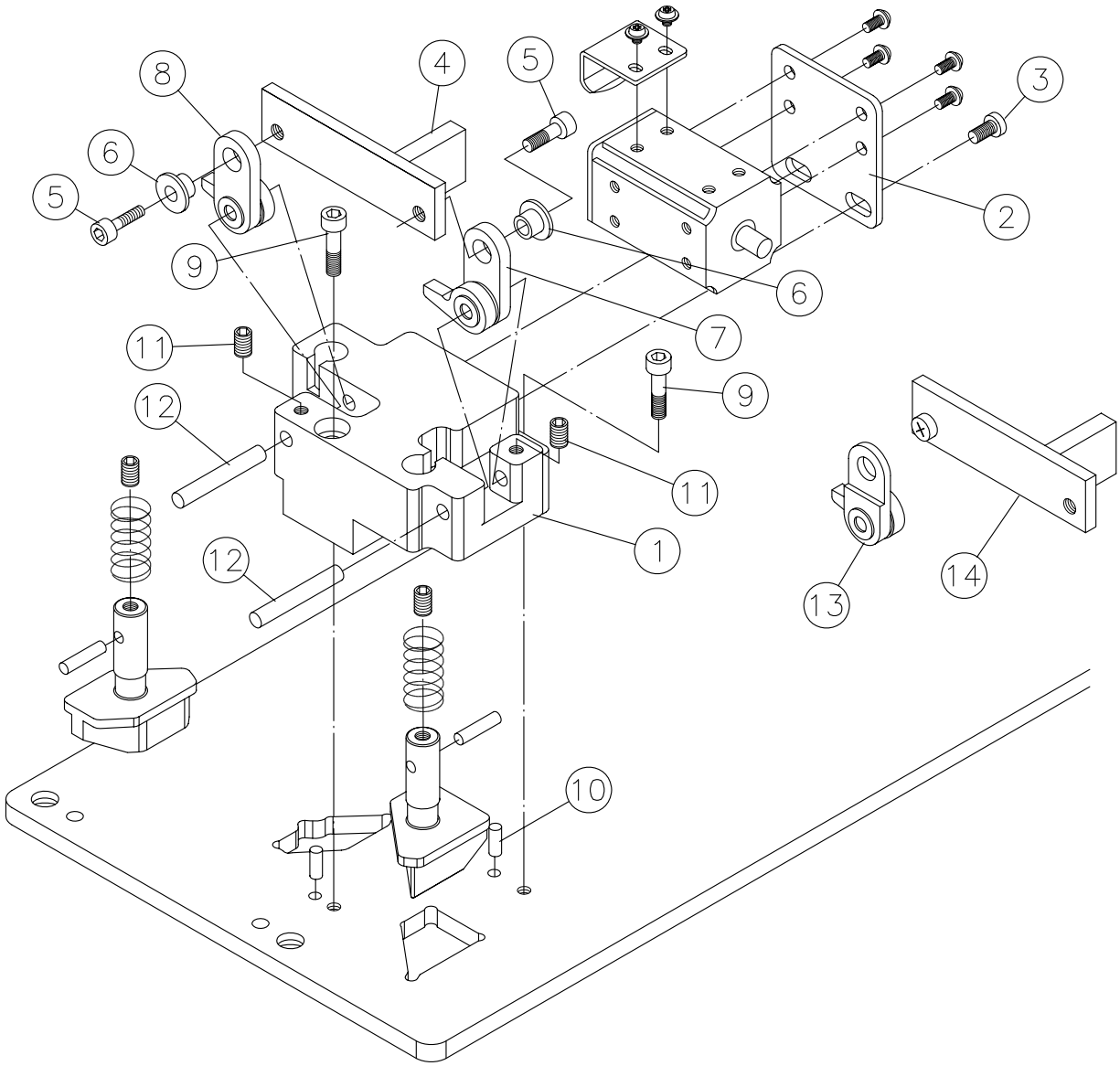

C

No.	編號 PARTS No.	品名 PARTS NAME	數量 QTY	備註 REMARKS
1	KCG9141	CAM BRACKET	2	
2	KCG9135	SOLENOID FITTING PLATE	2	
3	KSP0406	SCREW <M4x6>	4	
4	KCG9177A	CAM EXCHANGE LEVER<F>	1	
5	KSC0410	SCREW <M4x10>	3	
6	KCG9178A	COLLAR	3	
7	KCG9177	CAM EXCHANGE LEVER	2	
8	KCG9176A	CAM EXCHANGE LEVER<F>	1	
9	KSC0420	SCREW <M4x20>	4	
10	KPI0309	PIN	4	
11	KSE0404	SETSCREW <M4x4>	4	
12	KCG9178	PIN	4	
13	KCG9176B	CAM EXCHANGE LEVER<B>	1	
14	KCG9177B	CAM EXCHANGE LEVER<B>	1	

313

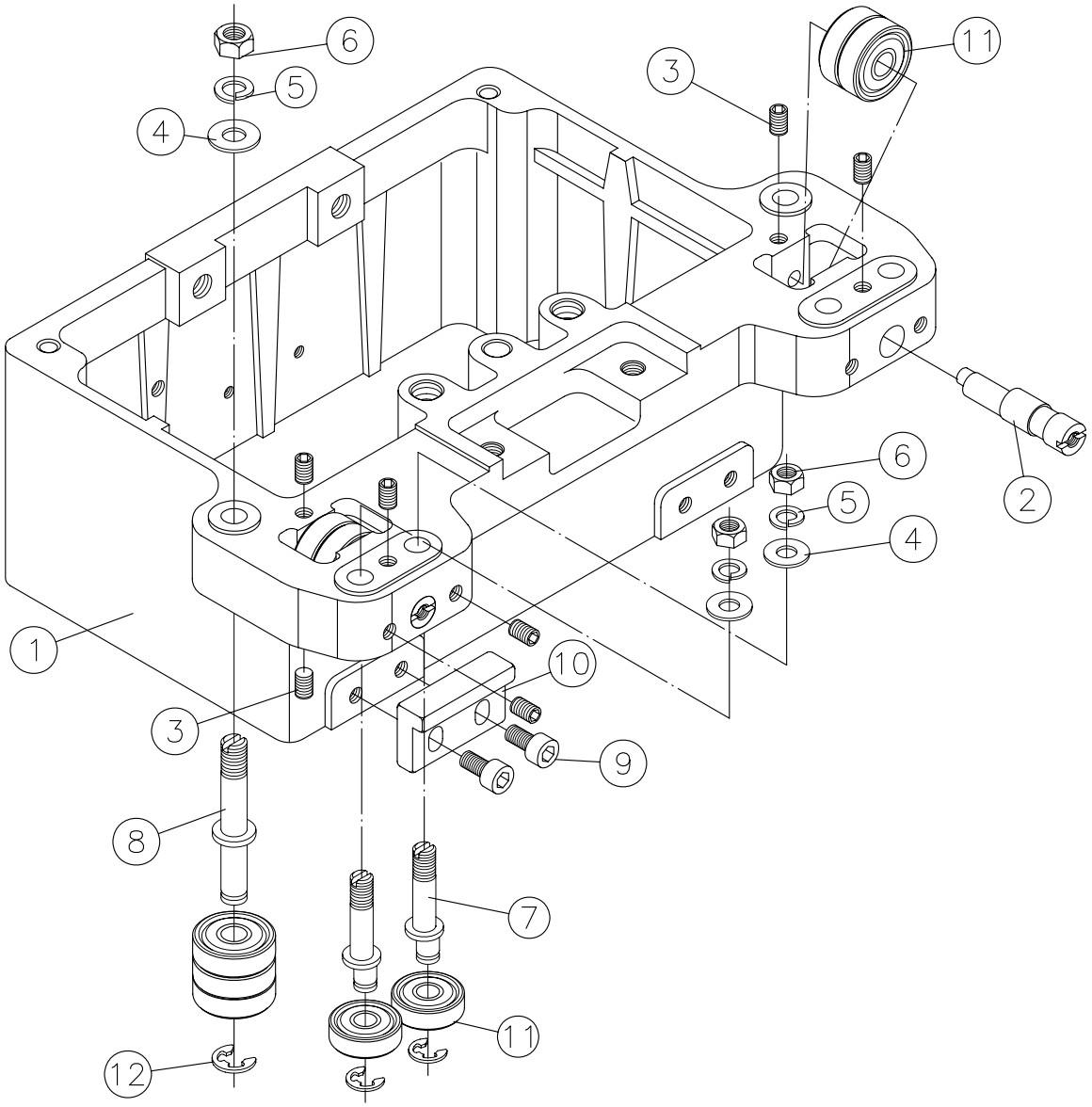

No.	編號 PARTS No.	品名 PARTS NAME	數量 QTY	備註 REMARKS
1	KCF9127	CARRIAGE COVER	2	
2	KCF9133	BEARING PIN	4	
3	KSE0406	SETSCREW <M4x6>	36	
4	KSW0006	WASHER	12	
5	KSWS006	SPRING WASHER	12	
6	KSN006	NUT	12	
7	KCF9131	STEPPED SCREW	8	
8	KCF9132	STEPPED SCREW	4	
9	KSC0412	SCREW <M4x12>	8	
10	KCF9134	CARRIAGE GUIDE SLIDER	4	
11	KCB0626	BALL BEARING	28	
12	KPE0005	E-RING	12	

C

313

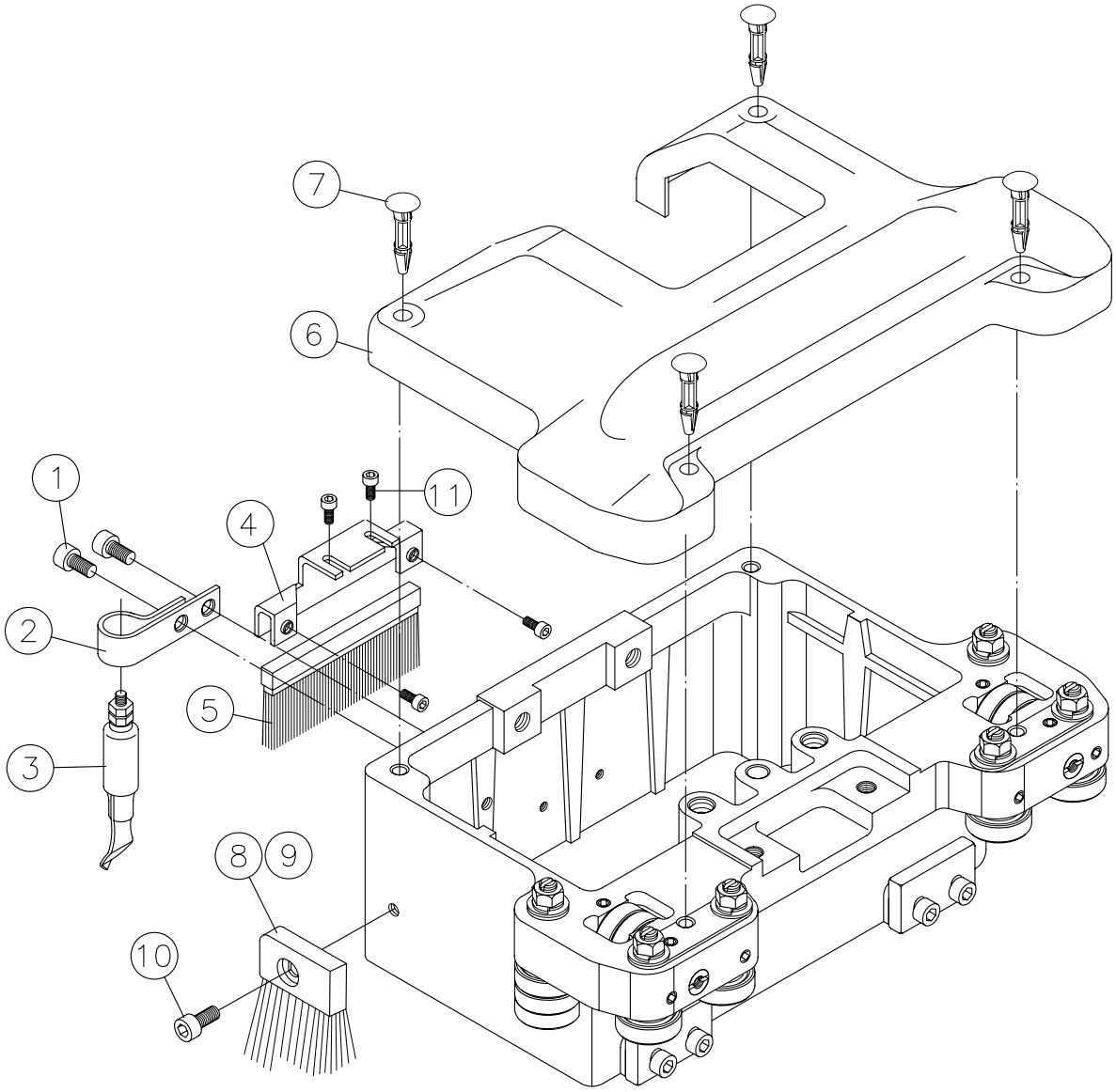

C

No.	編號 PARTS No.	品名 PARTS NAME	數量 QTY	備註 REMARKS
1	KSC0408	SCREW <M4x8>	2	
2	KCF9205	SETTING PLATE	2	
3	KCF9128	NEEDLE BREAKAGE DETECTOR	2	
4	KCF9153N	BRUSH BRACKET	2	
5	KCF9153A	BRUSH	2	
6	KCF9126	CAM BOX COVER <F,B>	2	
7	KEB0412	PIN	8	
8	KCF9211A	BRUSH (R-F) (L-B)	2	
9	KCF9211B	BRUSH (R-B) (L-F)	2	
10	KSC0306	SCREW <M3x6>	4	
11	KSR0306	SCREW <M3x6>	4	

313J

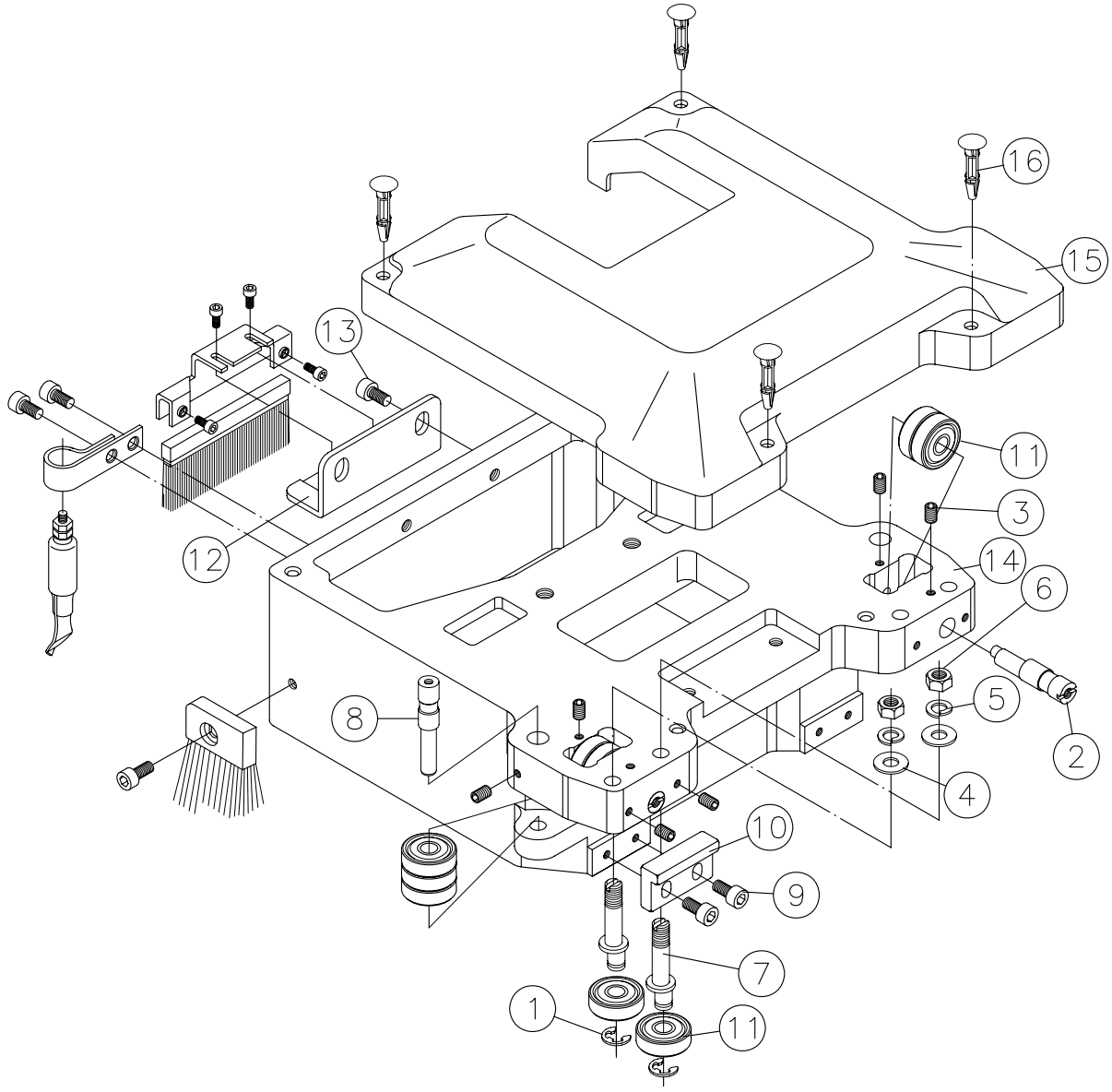

No.	編號 PARTS No.	品名 PARTS NAME	數量 QTY	備註 REMARKS
1	KPE0005	E-RING	12	
2	KCJ9133	BEARING PIN	4	
3	KSE0406	SETSCREW <M4x6>	32	
4	KSW0006	WASHER	8	
5	KSWS006	SPRING WASHER	8	
6	KSN006	NUT	8	
7	KCJ9131	STEPPED SCREW	8	
8	KCJ9132	STEPPED SCREW	4	
9	KSC0412	SCREW <M4x12>	8	
10	KCJ9134	CARRIAGE GUIDE SLIDER	4	
11	KCB0626	BALL BEARING	28	
12	KCJ9153A	BRUSH BRACKET	2	
13	KSC0408	SCREW <M4x8>	4	
14	KCJ9127	CARRIAGE COVER	2	
15	KCJ3320	COM BOX COVER <F,B>	2	
16	KEB0412	PIN	8	

C

313TJ

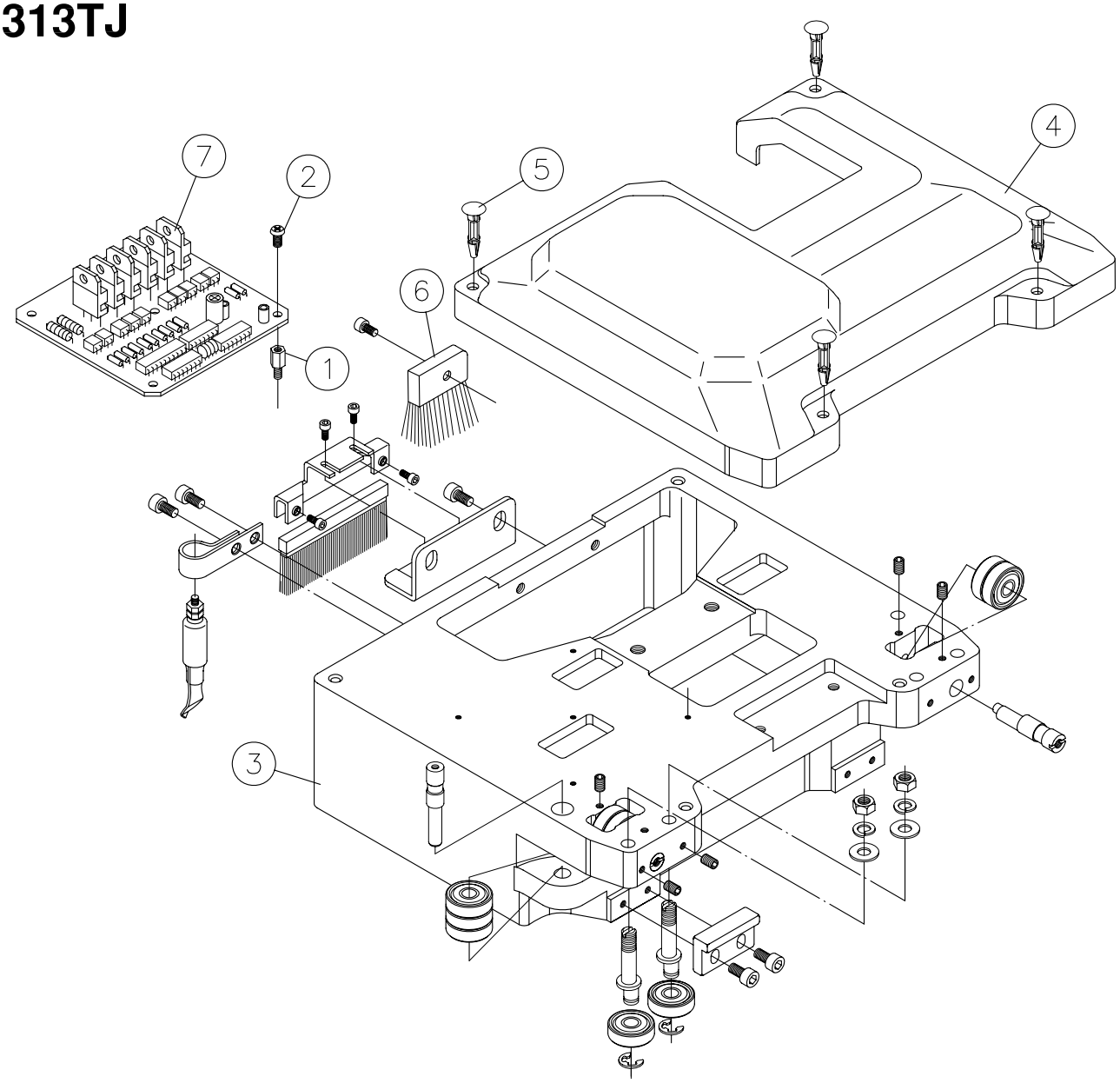

C

No.	編號 PARTS No.	品名 PARTS NAME	數量 QTY	備註 REMARKS
1	KCG9207	SPACER	10	
2	KSC0305	SCREW <M3x5>	10	
3	KCG9127	CARRIAGE COVER <F,B>	2	
4	KCJT015	COM BOX COVER <F,B>	2	
5	KEB0412	PIN	8	
6	KCG9211	BRUSH	2	
7	KCG0001	PC BOARD	2	

313Series

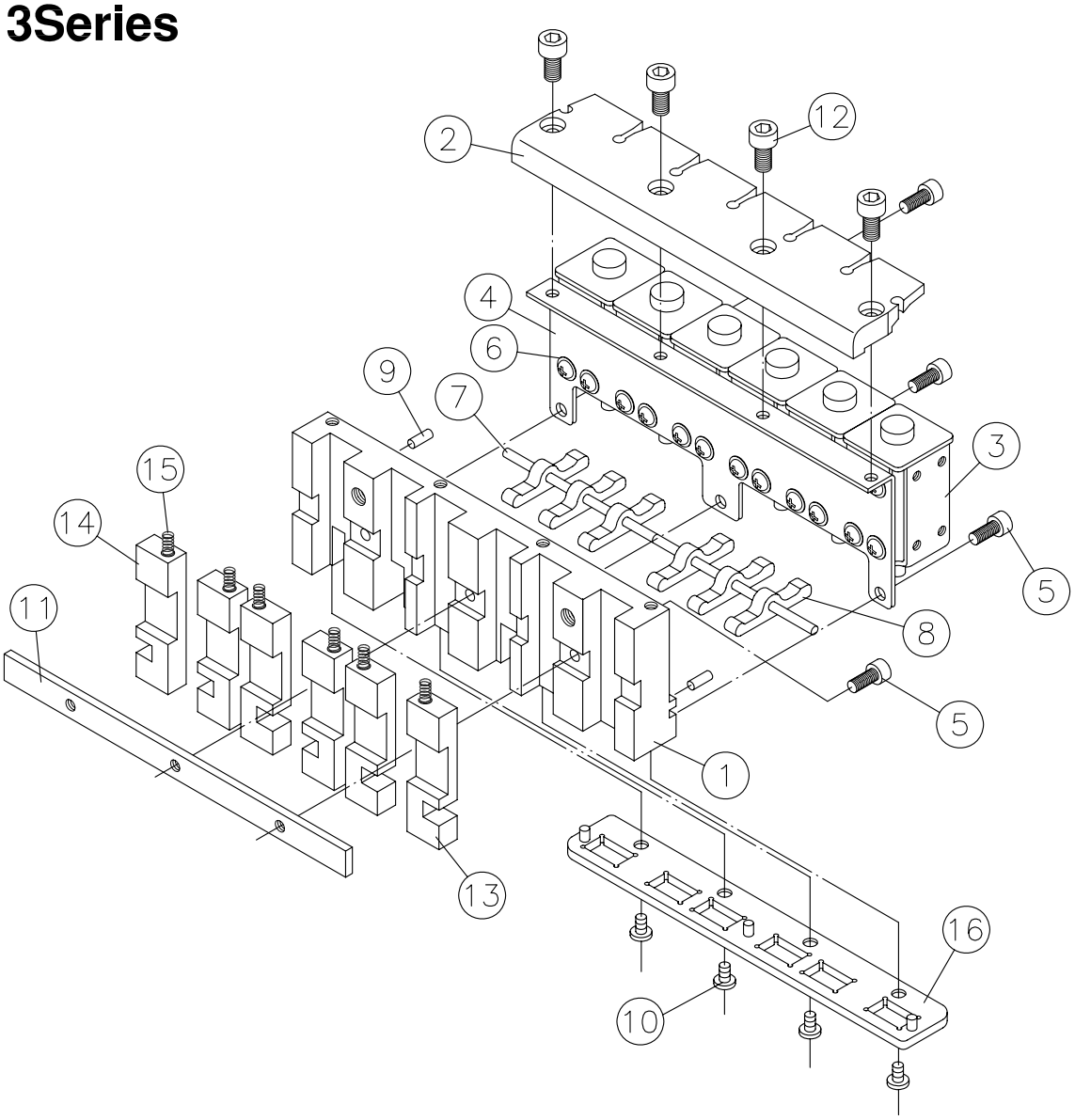

No.	編號 PARTS No.	品名 PARTS NAME	數量 QTY	備註 REMARKS
1	KCF9102	CARRIER CATCHING BLOCK	1	
2	KCF9107	PLUNGER STOPPER	1	
3	KCE2501	SOLENOID	6	
4	KCF9100	SOLENOID FITTING PLATE	1	
5	KSC0410	SCREW <M4x10>	6	
6	KSR0305	SCREW <M3x5>	24	
7	KCF9117	LEVER PIN	2	
8	KCF9116	PIN ACTING LEVER	6	
9	KPI0309	PIN	2	
10	KSP0406	SCREW <M4x6>	4	
11	KCF9111N1	PIN STOPPER	1	
12	KSC0412	SCREW <M4x12>	4	
13	KCF9109N1	CARRIER CATCHING <A>	3	
14	KCF9110N1	CARRIER CATCHING <B>	3	
15	KCF9114	PUSH SPRING	6	
16	KCF9112N	SOLENOID FITTING PLATE	1	

C

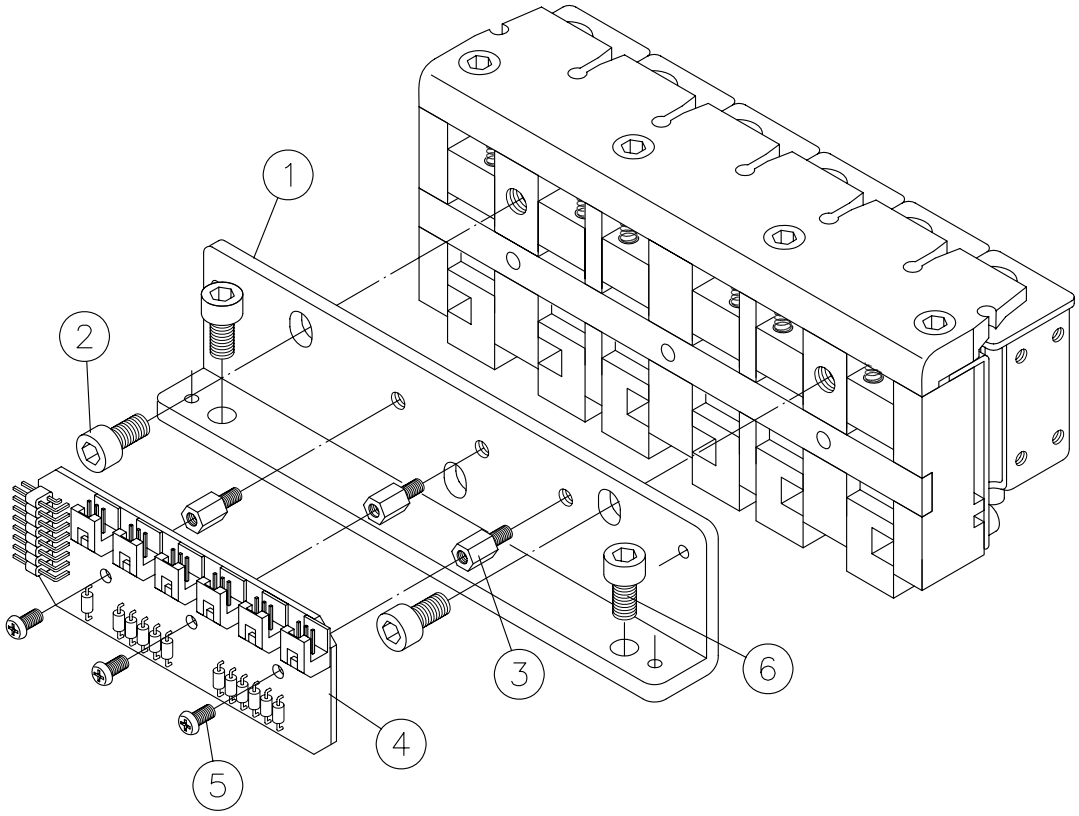

C

No.	編號 PARTS No.	品名 PARTS NAME	數量 QTY	備註 REMARKS
1	KCF9105	BLOCK SETTING PLATE	1	
2	KSC0616	SCREW <M6x16>	2	
3	KCF9207	BOARD SETTING PIN	3	
4	KCE0001	PC BOARD	1	
5	KSR0305	SCREW <M3x6>	3	
6	KSC0616	SCREW <M6x16>	2	

313Series

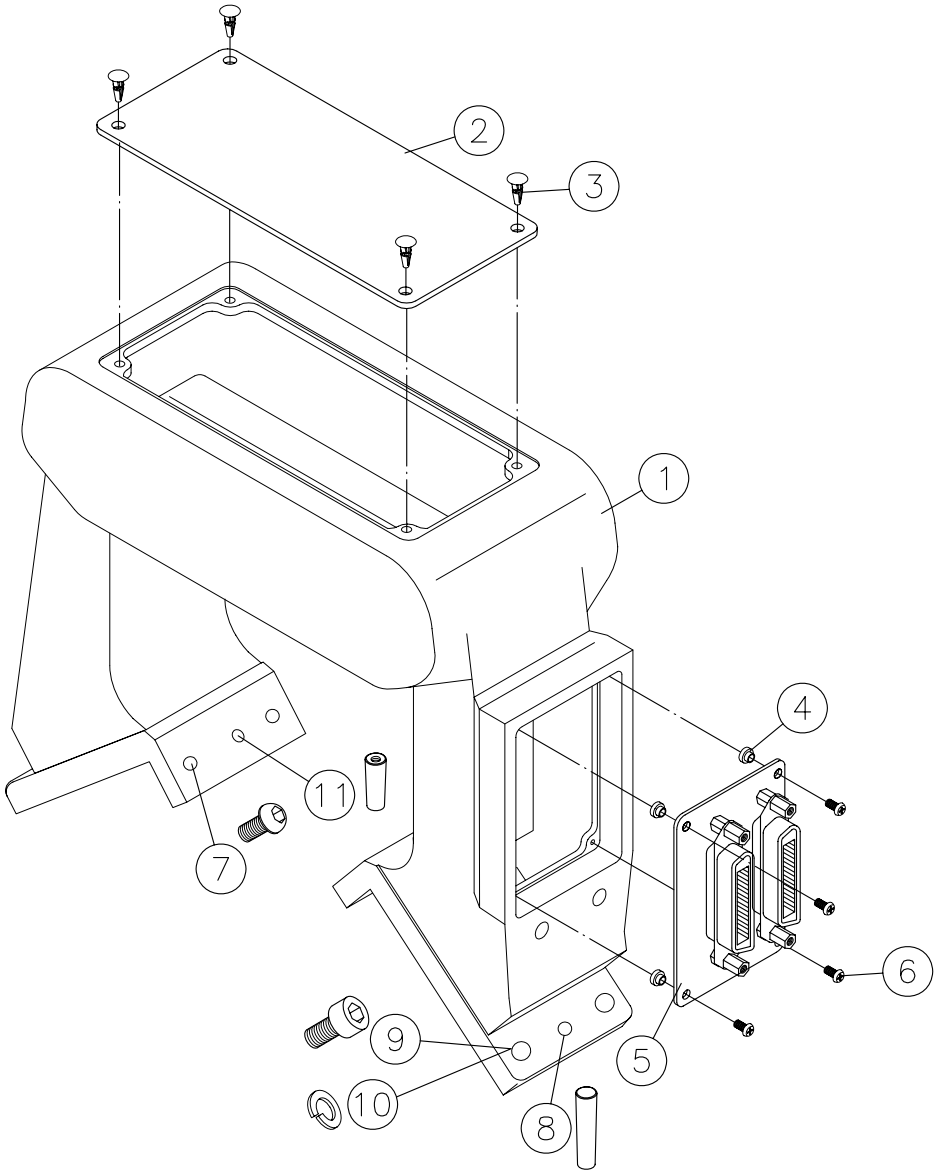

No.	編號 PARTS No.	品名 PARTS NAME	數量 QTY	備註 REMARKS
1	KCF9118	CARRIAGE GATE	1	
2	KCF9210	CARRIER SELECTION BOX COVER	1	
3	KEB0408	PIN	4	
4	KCF9209	COLLAR	4	
5	KCF9204	PC BOARD	1	
6	KSR0305	SCREW <M3x5>	4	
7	KSD0616	SCREW <M6x16>	4	
8	KPI0625	PIN	2	
9	KSC0830	SCREW <M8x30>	4	
10	KSWS008	WASHER	4	
11	KPI0620	PIN	2	

C

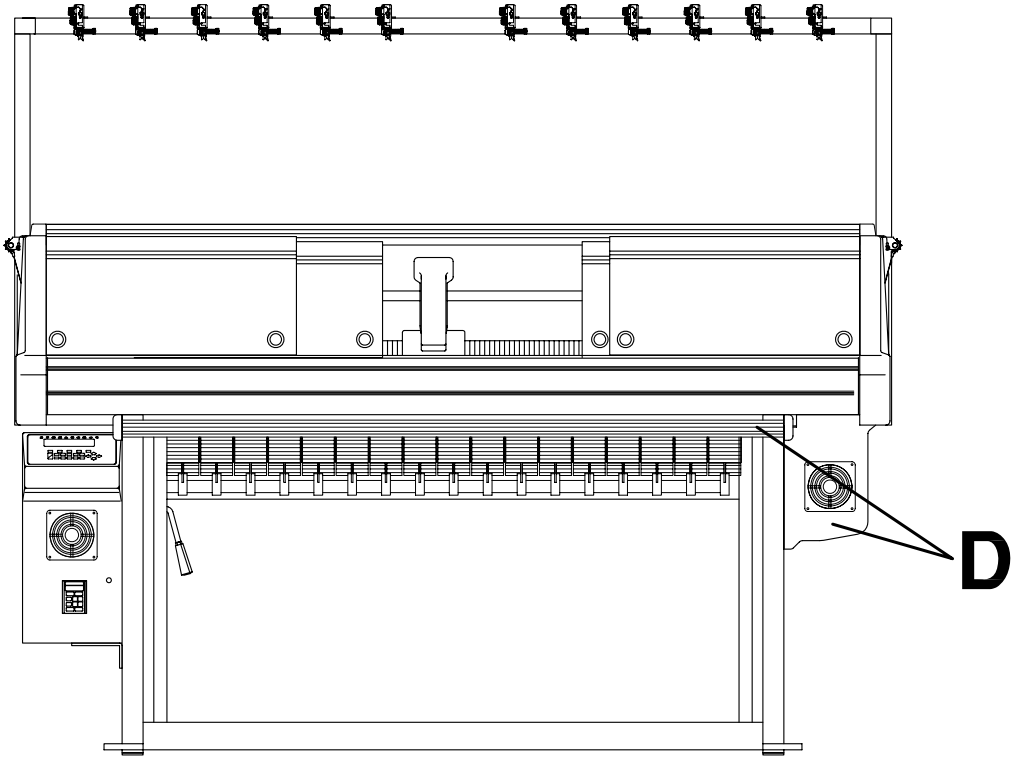

傳動裝置 /Driving Equipment:

D1-D6

313Series

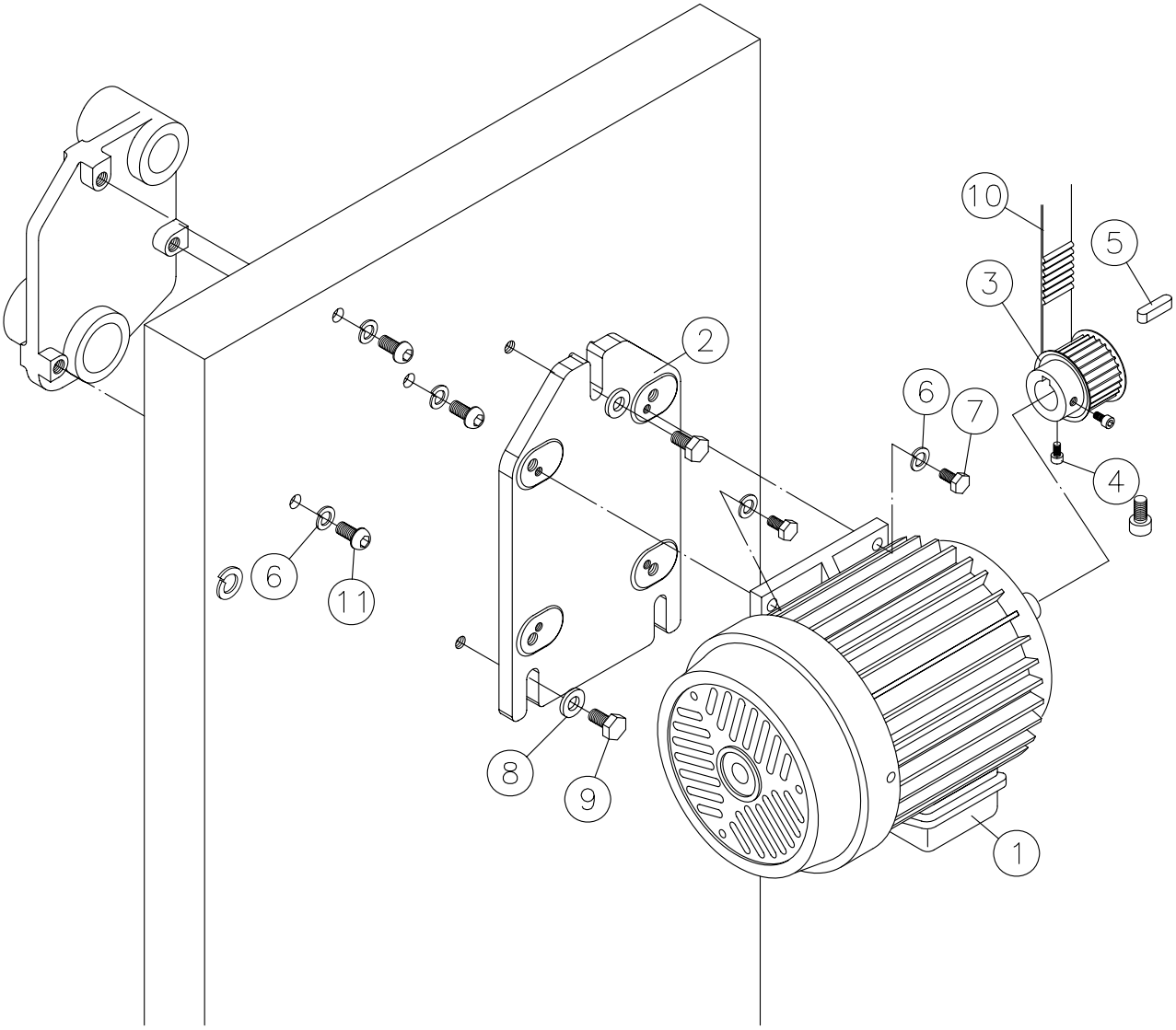

No.	編號 PARTS No.	品名 PARTS NAME	數量 QTY	備註 REMARKS
1	KCK9056	MAIN MOTOR	1	
2	KCF9057	MOTOR BOARD	1	
3	KCK9049	REDUCTION PULLEY	1	
4	KSC0410	SCREW <M4x10>	2	
5	KEY0005	KEY	1	
6	KSWS008	SPRING WASHER	4	
7	KSS0616	SCREW <M6x16>	4	
8	KSW0008	WASHER	3	
9	KSS0816	SCREW <M8x16>	3	
10	KCK9044	TIMING BELT	1	
11	KSD0830	SCREW <M8x30>	3	

D

313Series

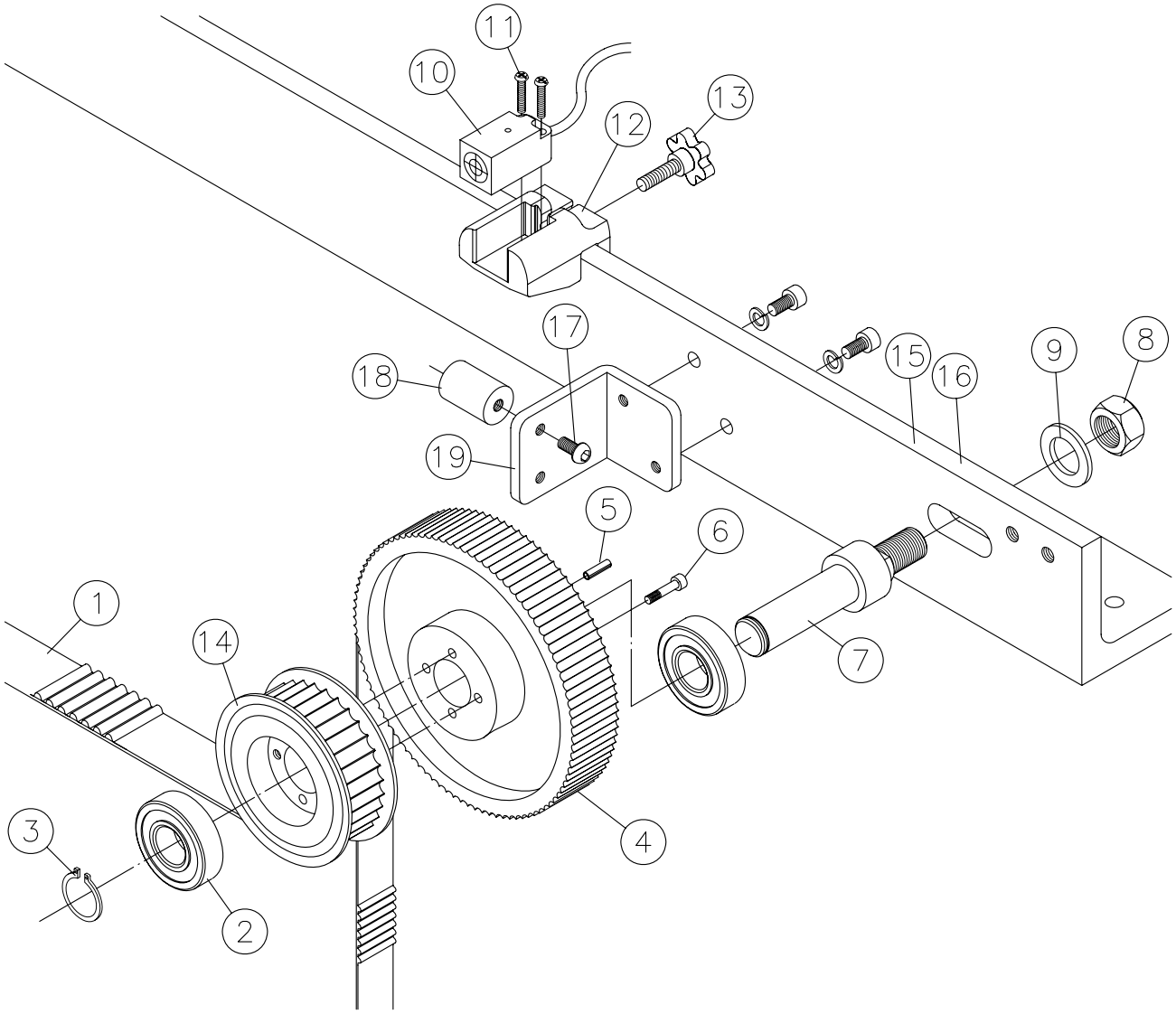

No.	編號 PARTS No.	品名 PARTS NAME	數量 QTY	備註 REMARKS
1	KCF9053	TIMING BELT	1	30",40",54"
2	KCB6205	BALL BEARING	2	
3	KSEC019	RING	1	
4	KCF9045	PULLEY	1	
5	KPC0530	PIN	2	
6	KSC0525	SCREW <M5x25>	2	
7	KCF9046A	REDUCTION SHAFT	1	
8	KSN0016	NUT	1	
9	KSW0016	WASHER	1	
10	KCF9034	SENSOR	4	
11	KSR0318	SCREW <M3x18>	8	
12	KCK9038S	SENSOR HOLDING PLATE	4	
13	KCK9038R	SCREW	4	
14	KCF9051	PULLEY	1	
15	KCK9574	DRIVEN GUIDE STAY	1	313 30",40",54"
16	KCDJ203	DRIVEN GUIDE STAY	1	313J&TJ
17	KSD0620	SCREW <M6x20>	2	
18	KCF9062	STOPPER	2	
19	KCF9061	STOPPER HOLDING PLATE	2	

D

313Series

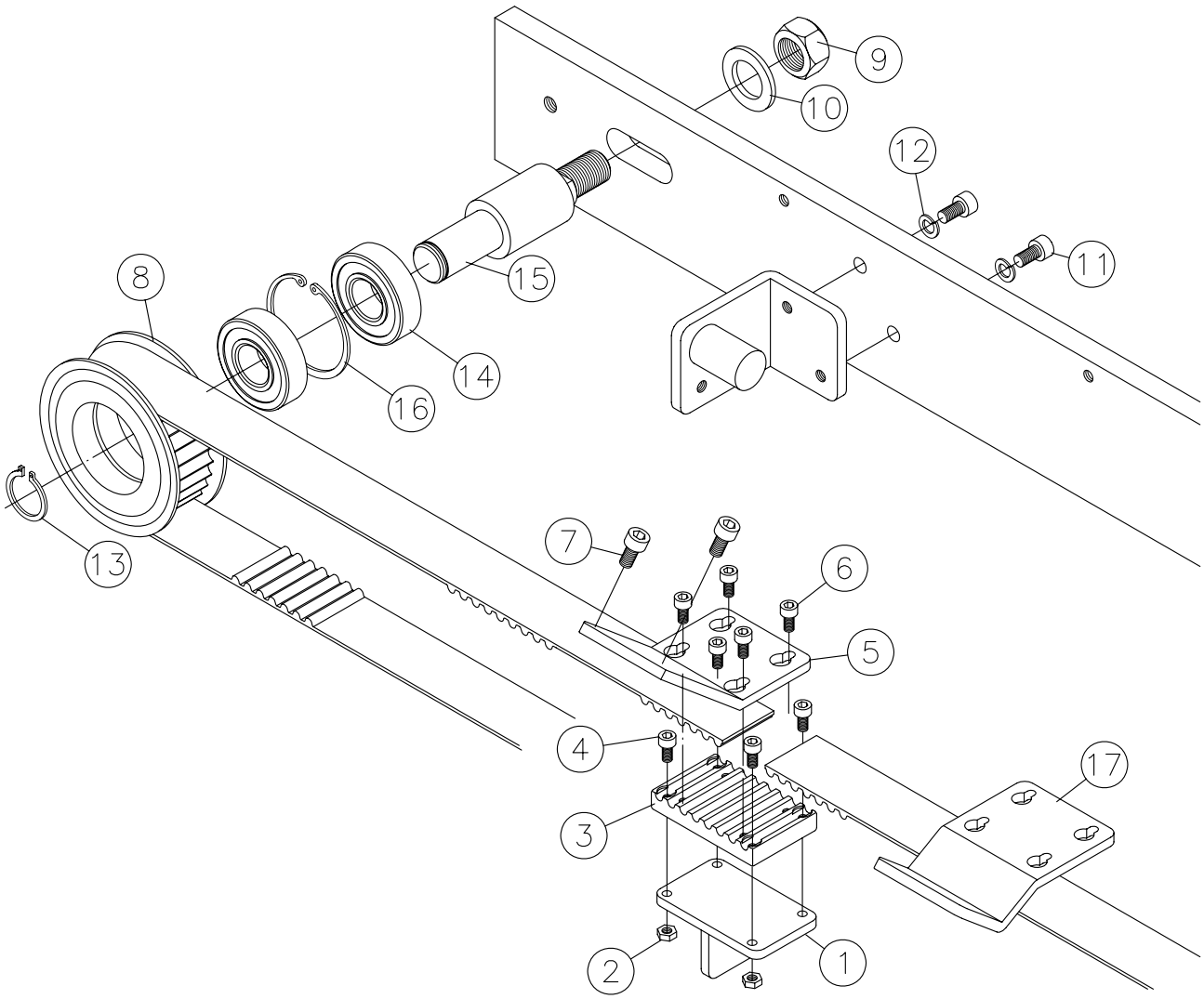

No.	編號 PARTS No.	品名 PARTS NAME	數量 QTY	備註 REMARKS
1	KCK9060	STOPPER PLATE	1	
2	KSN0004	NUT	4	
3	KCF9042	BELT PRESSER	1	
4	KSC0420	SCREW <M4x20>	4	
5	KCF9040	CARRIAGE CONNECTING PLATE	1	313
6	KSC0416	SCREW <M4x16>	4	
7	KSD0616	SCREW <M6x16>	2	
8	KCDJ200	DRIVEN PULLEY	1	
9	KSN0016	NUT	1	
10	KSW0016	WASHER	1	
11	KSC0616	SCREW <M6x16>	4	
12	KSWS006	SPRING WASHER	4	
13	KSEC019	RING	1	
14	KCB6203	BALL BEARING	2	
15	KCDJ201	DRIVEN PULLEY SHAFT	1	
16	KSEC052	RING	1	
17	KCJ9042	CARRIAGE CONNECTING PLATE	1	313J&TJ

D

313Series

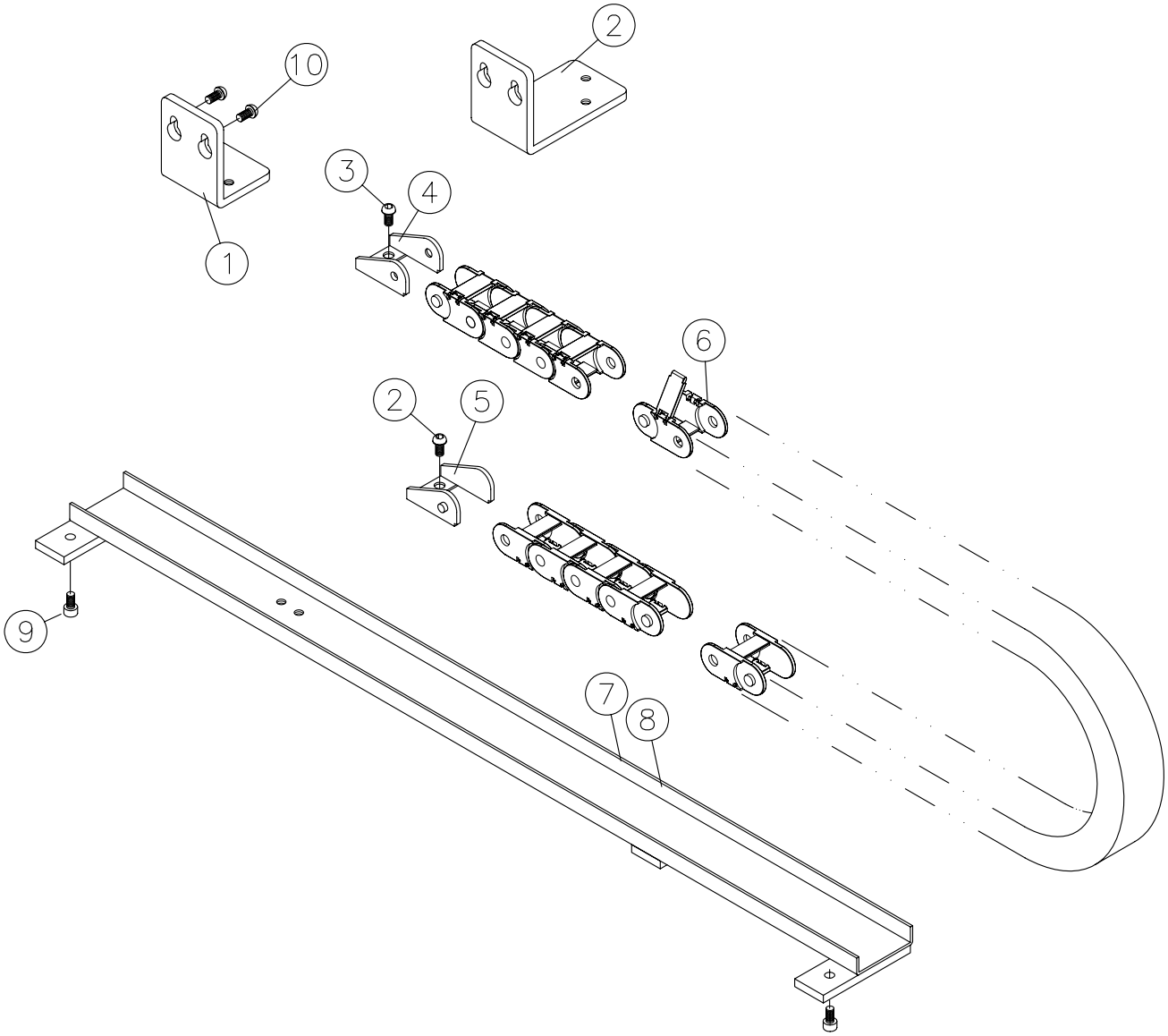

No.	編號 PARTS No.	品名 PARTS NAME	數量 QTY	備註 REMARKS
1	KCF9031	CABLE HOLDING PLATE	2	313
2	KCJ9031	CABLE HOLDING PLATE	2	313J&TJ
3	KSD0606	SCREW <M6x6>	4	
4	KCK9028U	CABLE GUIDE MOUNTING PLATE	2	
5	KCK9028D	CABLE GUIDE MOUNTING PLATE	2	
6	KCK9032A	CAP FLEX	27	40”=33,54”=37Pcs
7	KCK9027A	CABLE ROOM MAT	1	313 30”,40”,54”
8	KCDJ005	CABLE ROOM MAT	1	313J&TJ
9	KSC0620	SCREW<M6X20>	2	
10	KSD0612	SCREW <M6x12>	2	

D

313Series

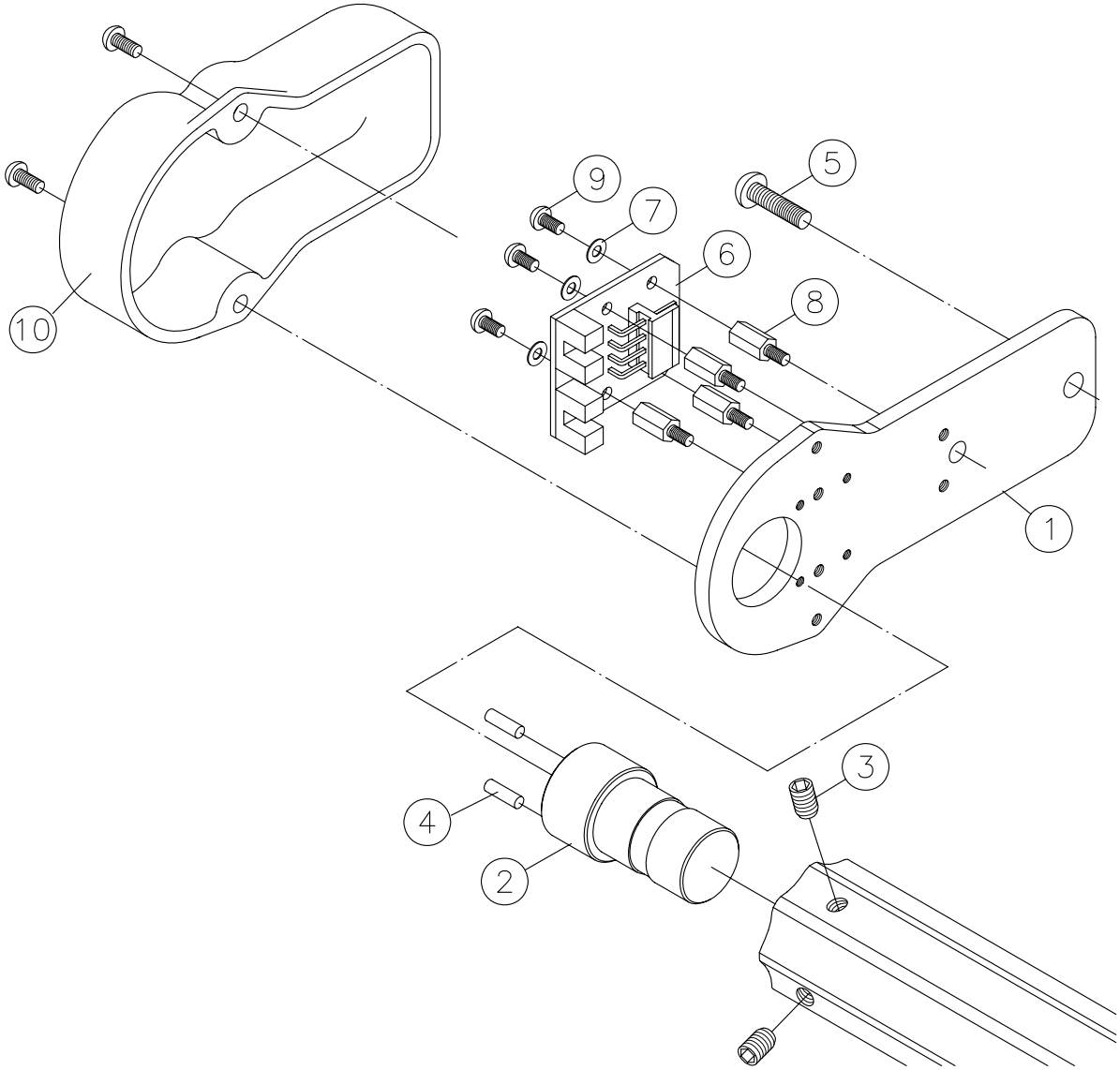

No.	編號 PARTS No.	品名 PARTS NAME	數量 QTY	備註 REMARKS
1	KCK9364	OPERATION BAR BRACKET	1	
2	KCK9368	SHAFT OF OPERATION BAR	2	
3	KSE0606	SET SCREW <M6X6>	4	
4	KPI0312	PIN	2	
5	KSD0616	SCREW <M6X16>	4	
6	KCF9372	PC BOARD	1	
7	KSW0003	WASHER	4	
8	KCF9373	SPACER	4	
9	KSR0315	SCREW <M3X15>	4	
10	KCK9365	COVER	2	

D

313Series

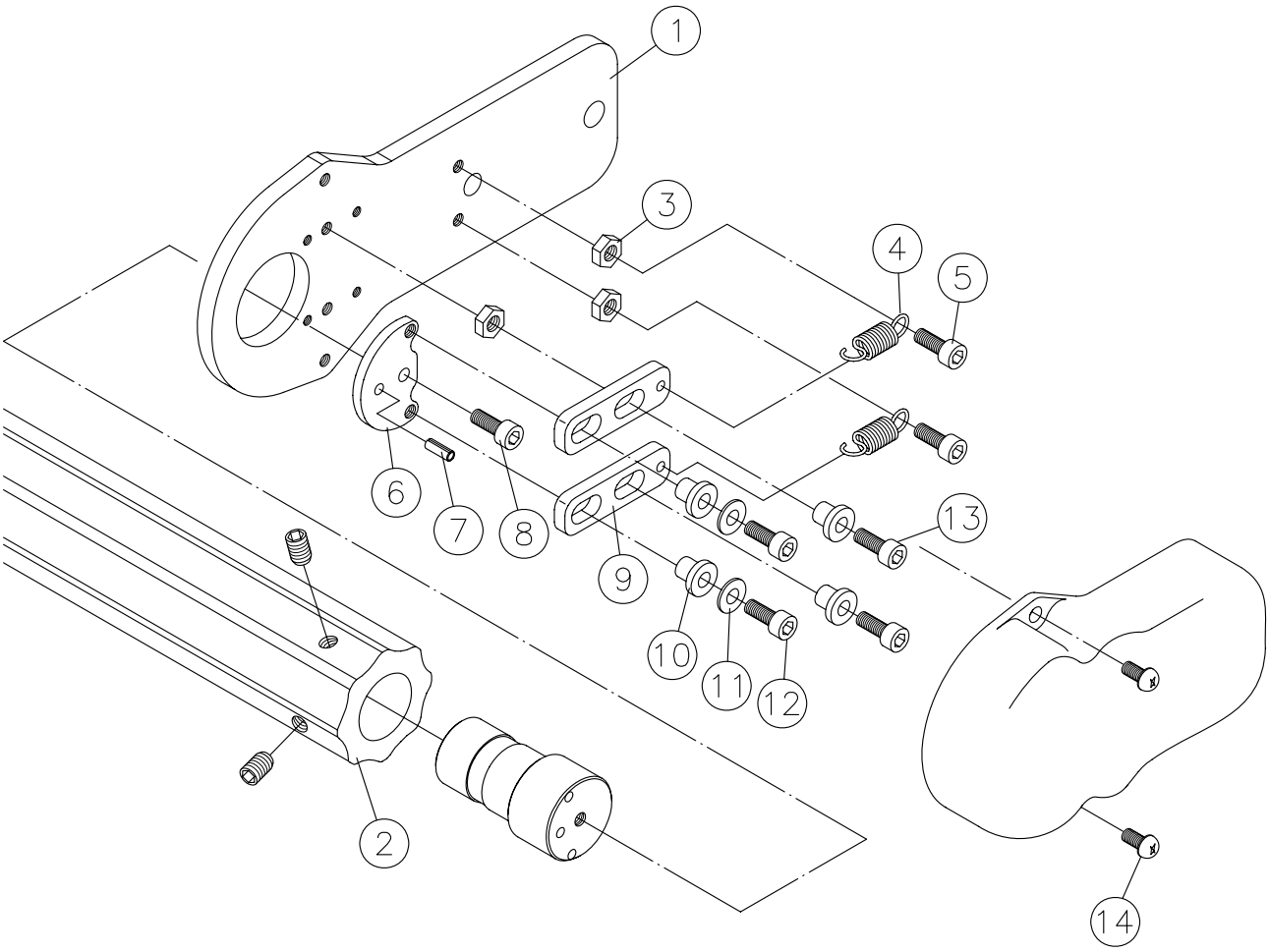

No.	編號 PARTS No.	品名 PARTS NAME	數量 QTY	備註 REMARKS
1	KCK9364	OPERATION BAR BRACKET	1	
2	KCF9367	OPERATION BAR	1	30”,40”,54”
3	KSN0407	NUT	4	
4	KCF9377	PULL SPRING	2	
5	KSC0412	SCREW <M4X12>	2	
6	KCF9378	TURNING PLATE	1	
7	KPC0310	PIN	1	
8	KSC0410	SCREW <M4X10>	1	
9	KCF9379	STOPPER PLATE	2	
10	KCF9382	COLLAR	4	
11	KSW0004	WASHER	2	
12	KSC0410	SCREW <M4X10>	2	
13	KSC0412	SCREW <M4X12>	2	
14	KSU0412	SCREW <M4X12>	4	

D

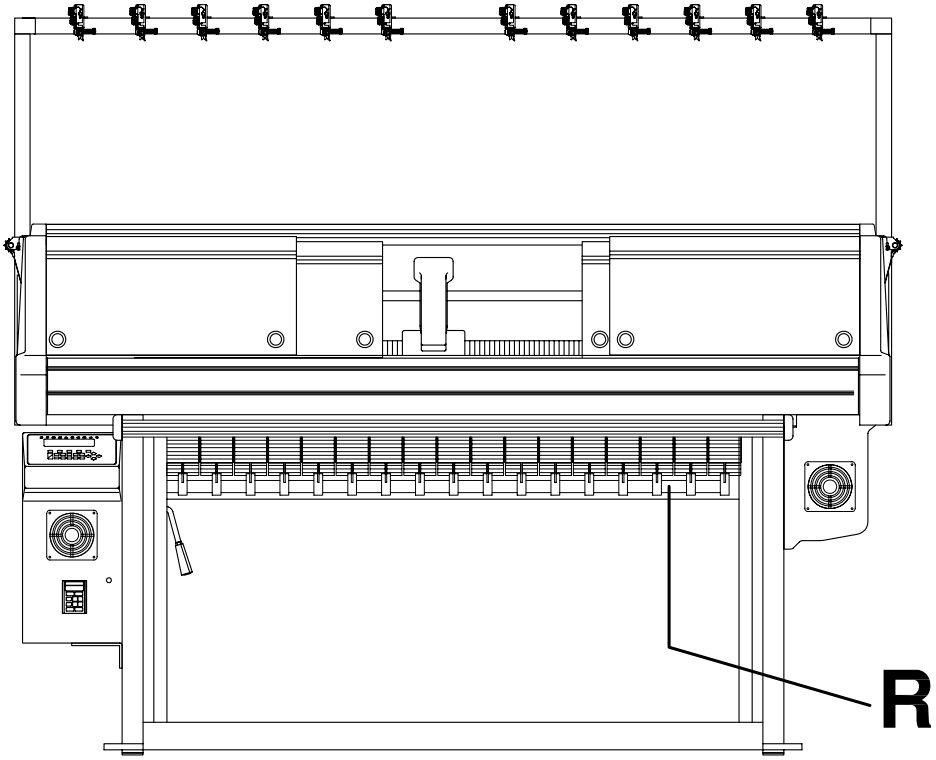

捲布裝置 /Take-down Equipment:

R1-R7

313Series

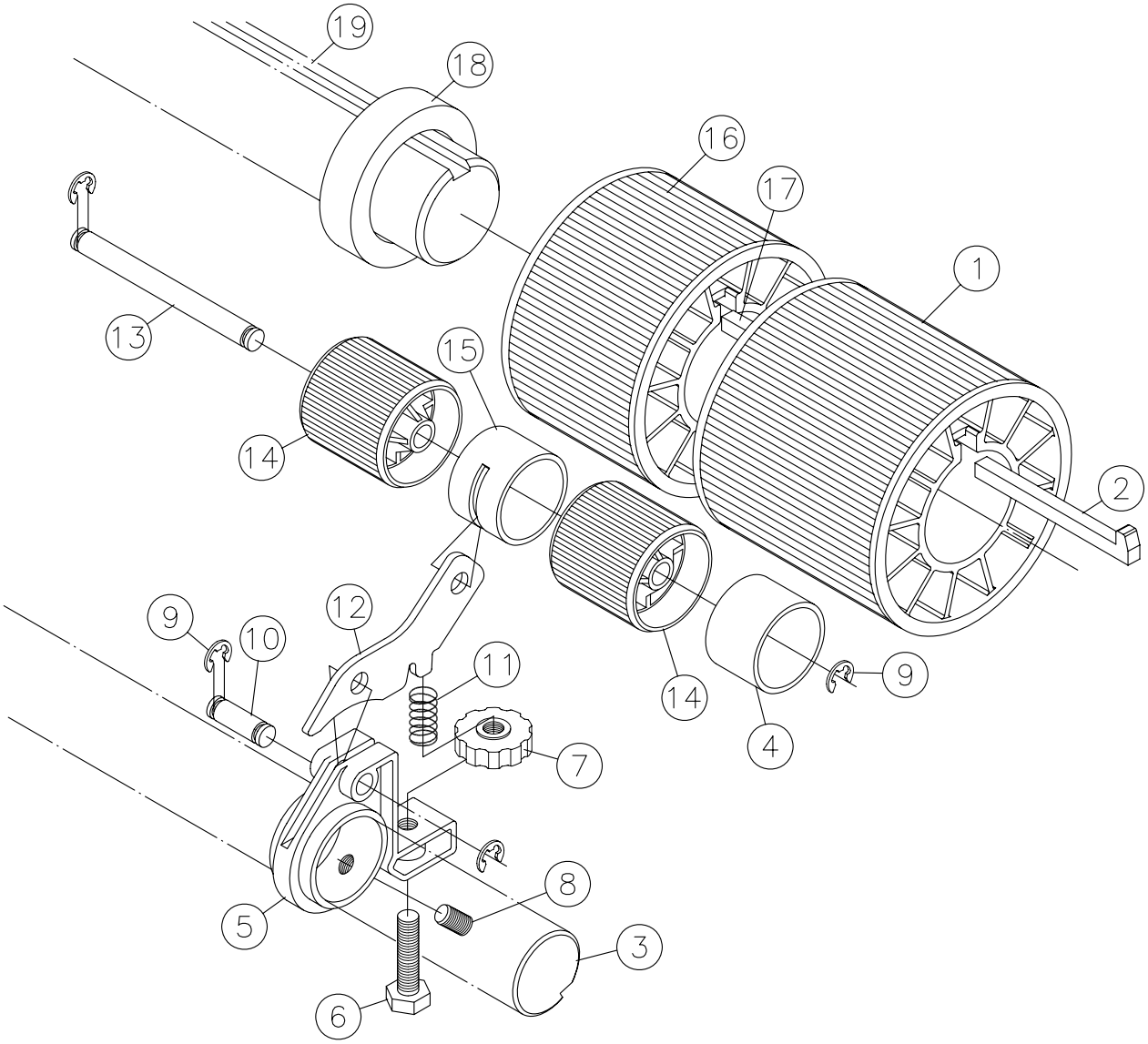

No.	編號 PARTS No.	品名 PARTS NAME	數量 QTY	備註 REMARKS
1	KCF9520S	MAIN ROLLER ASSY.	8	40”=11,54”=15Pcs
2	KCF9520CS	SPACER PLATE	8	40”=11,54”=15Pcs
3	KCDJ009B	SUB-ROLLER SHAFT	1	30”,40”,54”
4	KCF9543I	SPACER COLLAR	7	40”=10,54”=14Pcs
5	KCF9543AN	SUB-ROLLER GUIDE	8	40”=11,54”=15Pcs
6	KSS0830	SCREW <M8x30>	8	40”=11,54”=15Pcs
7	KCF9543B	KNOB NUT	8	40”=11,54”=15Pcs
8	KSE0808	SETSCREW <M8x8>	8	40”=11,54”=15Pcs
9	KPE0007	E-RING	32	40”=44,54”=60Pcs
10	KCF9543C	PIN	8	40”=11,54”=15Pcs
11	KCF9543D	PUSH SPRING	8	40”=11,54”=15Pcs
12	KCF9543EN	SUB-ROLLER ADJUSTING PLATE	8	40”=11,54”=15Pcs
13	KCF9543F	SUB-ROLLER HOLDING SHAFT	8	40”=11,54”=15Pcs
14	KCF9543G	SUB-ROLLER	16	40”=22,54”=30Pcs
15	KCF9543H	ROLLER COLLAR	8	40”=11,54”=15Pcs
16	KCF9520SC	MAIN ROLLER ASSY	1	30”&54”
17	KCF9520CSC	SPACER PLATE	1	30”&54”
18	KCDJ007	COLLAR	2	40”
19	KCDJ009A	MAIN ROLLER SHAFT	1	30”,40”,54”

R

Option

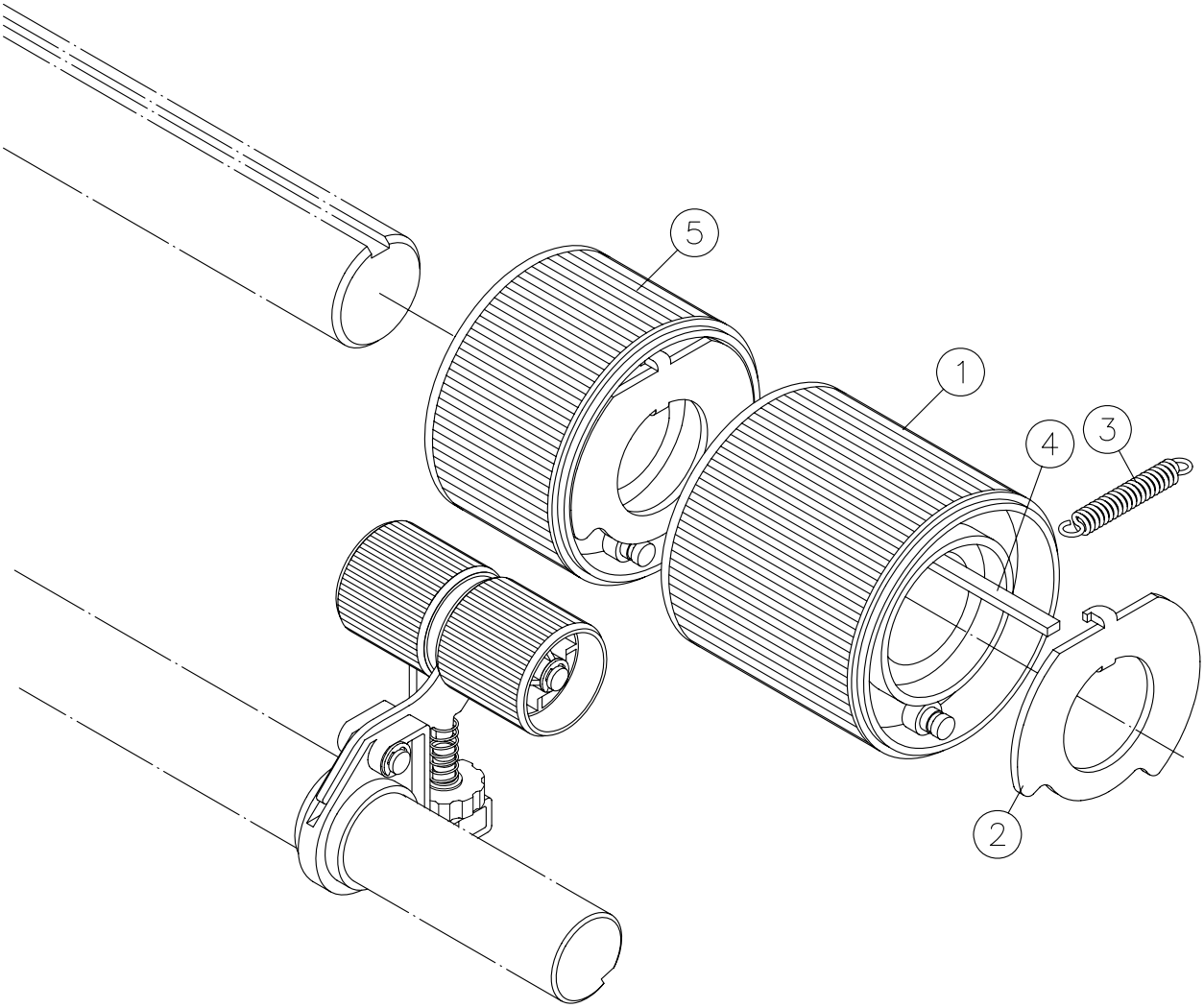

No.	編號 PARTS No.	品名 PARTS NAME	數量 QTY	備註 REMARKS
1	KCF9520	MAIN ROLLER ASSY	8	30”=11,54”=15Pcs
2	KCF9521	SPRING GUIDE PLATE	8	30”=12,54”=16Pcs
3	KCF9519	PULL SPRING	8	30”=12,54”=16Pcs
4	KCF9596	SPACER PLATE	8	30”=11,54”=15Pcs
5	KCF9520C	MAIN ROLLER ASSY	1	30”&54”

R

313Series

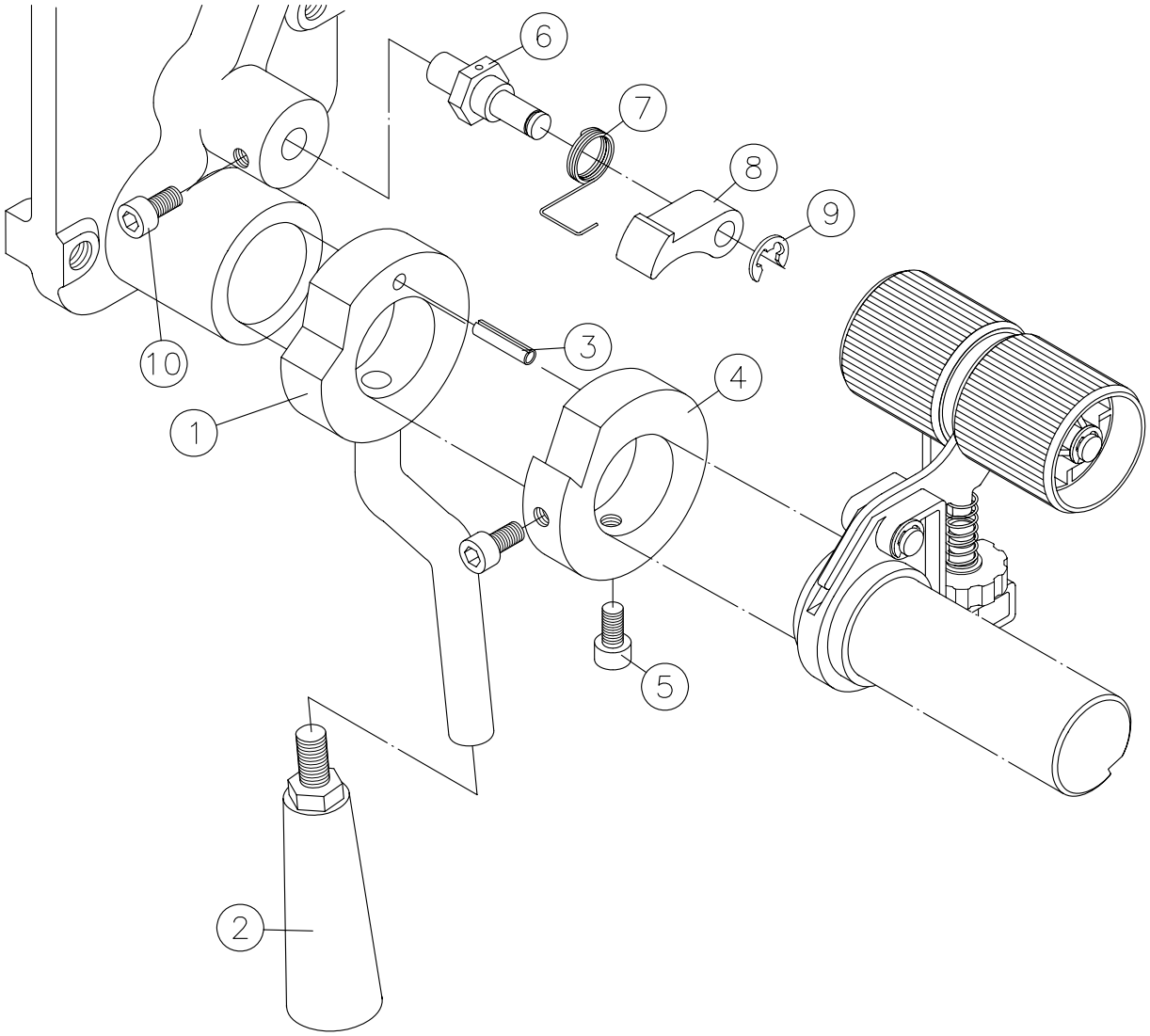

No.	編號 PARTS No.	品名 PARTS NAME	數量 QTY	備註 REMARKS
1	KCF9541	SUB-ROLLER TENSION DISK	1	
2	KCF9541A	GRIP	1	
3	KPC0516	PIN	1	
4	KCF9540	STOPPER METAL	1	
5	KSC0620	SCREW <M6x20>	2	
6	KCF9535	NUT	1	
7	KCF9537	KICK SPRING	1	
8	KCF9536	CLUTCH PAWL	1	
9	KPE0007	E-RING	1	
10	KSC0616	SCREW <M6x16>	1	

R

313Series

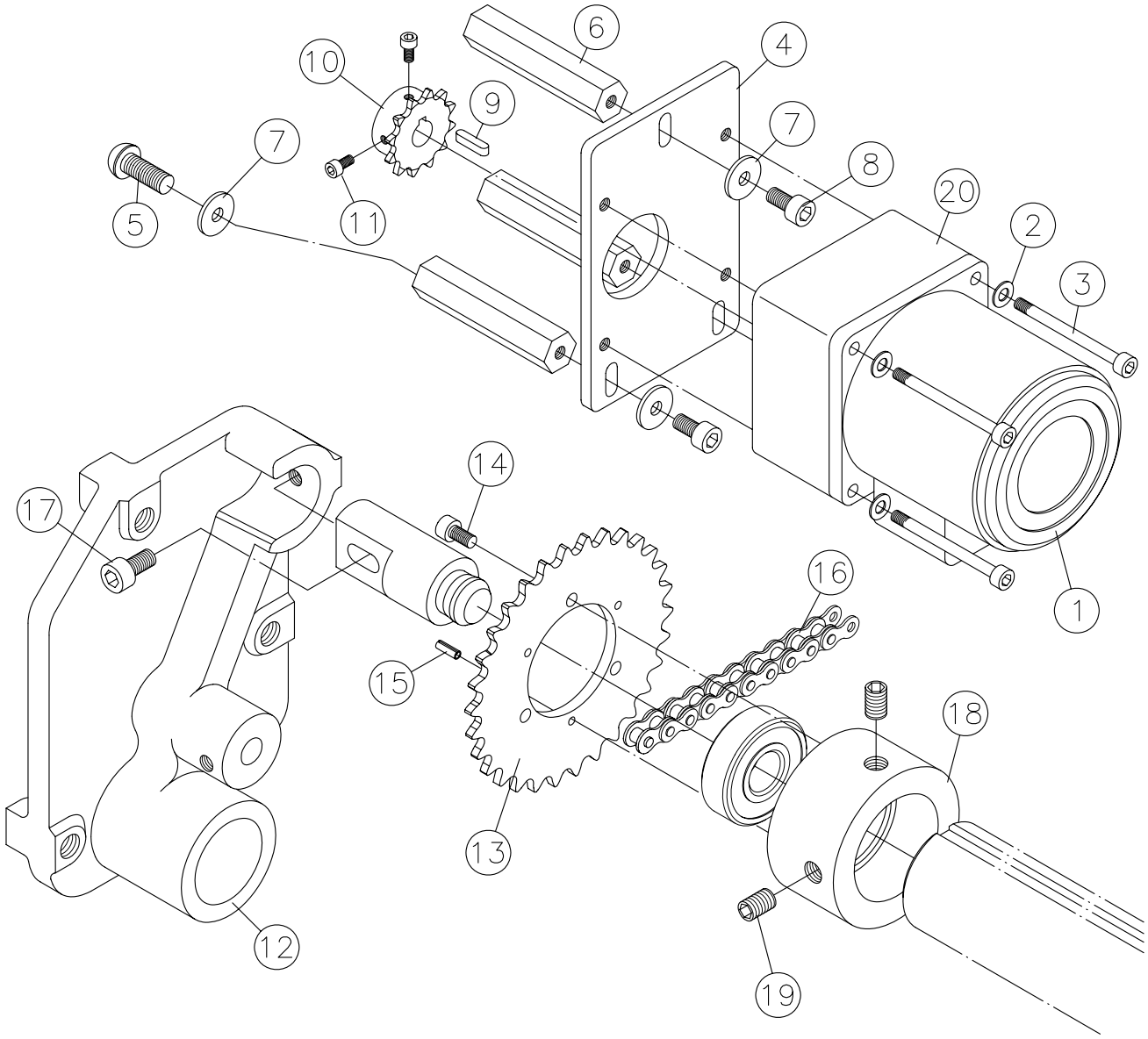

No.	編號 PARTS No.	品名 PARTS NAME	數量 QTY	備註 REMARKS
1	KCF9526	TAKE-DOWN MOTOR	1	
2	KSW0006	WASHER	4	
3	KSM0680	SCREW <M6x80>	4	
4	KCF9522	MOTOR BASE	1	
5	KSD0620	SCREW <M6x20>	3	
6	KCF9523	BASE SET PIN	3	
7	KSW0006	WASHER	6	
8	KSC0616	SCREW <M6x16>	3	
9	KEY0004	KEY	1	
10	KCF9528	SPROCKET	1	
11	KSC0412	SCREW <M4x12>	2	
12	KCF9501	BRACKET <L>	1	
13	KCF9508	SPROCKET	1	
14	KSC0416	SCREW <M4x16>	3	
15	KPC0412	PIN	3	
16	KCF9510	CHAIN	1	
17	KSC0630	SCREW <M6x30>	1	
18	KCF9506	FLANGE	2	
19	KSE0812	SETSCREW <M8x12>	4	
20	KCF9526A	TAKE-DOWN GEAR	1	

R

313Series

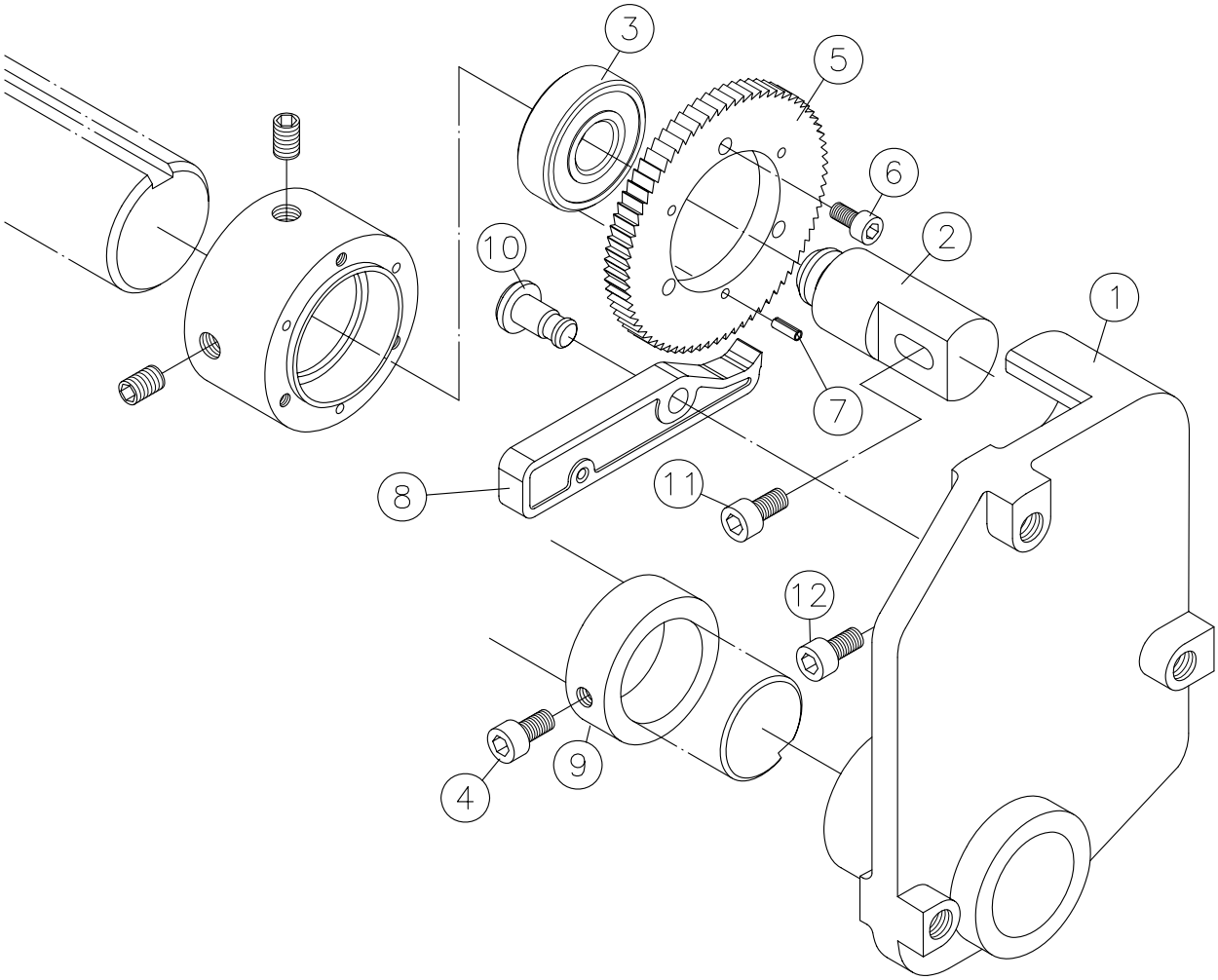

No.	編號 PARTS No.	品名 PARTS NAME	數量 QTY	備註 REMARKS
1	KCF9500	BRACKET <R>	1	
2	KCF9504	ROLLER HOLDING PIN	1	
3	KCB6203	BALL BEARING	1	
4	KSC0616	SCREW <M6x16>	1	
5	KCF9512	TAKE DOWN RATCHET	1	
6	KSC0418	SCREW <M4x18>	3	
7	KPC0412	PIN	3	
8	KCF9514	RATCHET PAWL	1	
9	KCF9545	SUB-ROLLER SHAFT COLLAR	1	
10	KCF9514B	SHAFT	1	
11	KSC0630	SCREW <M6x30>	1	
12	KSC0616	SCREW <M6x16>	1	

R

313Series

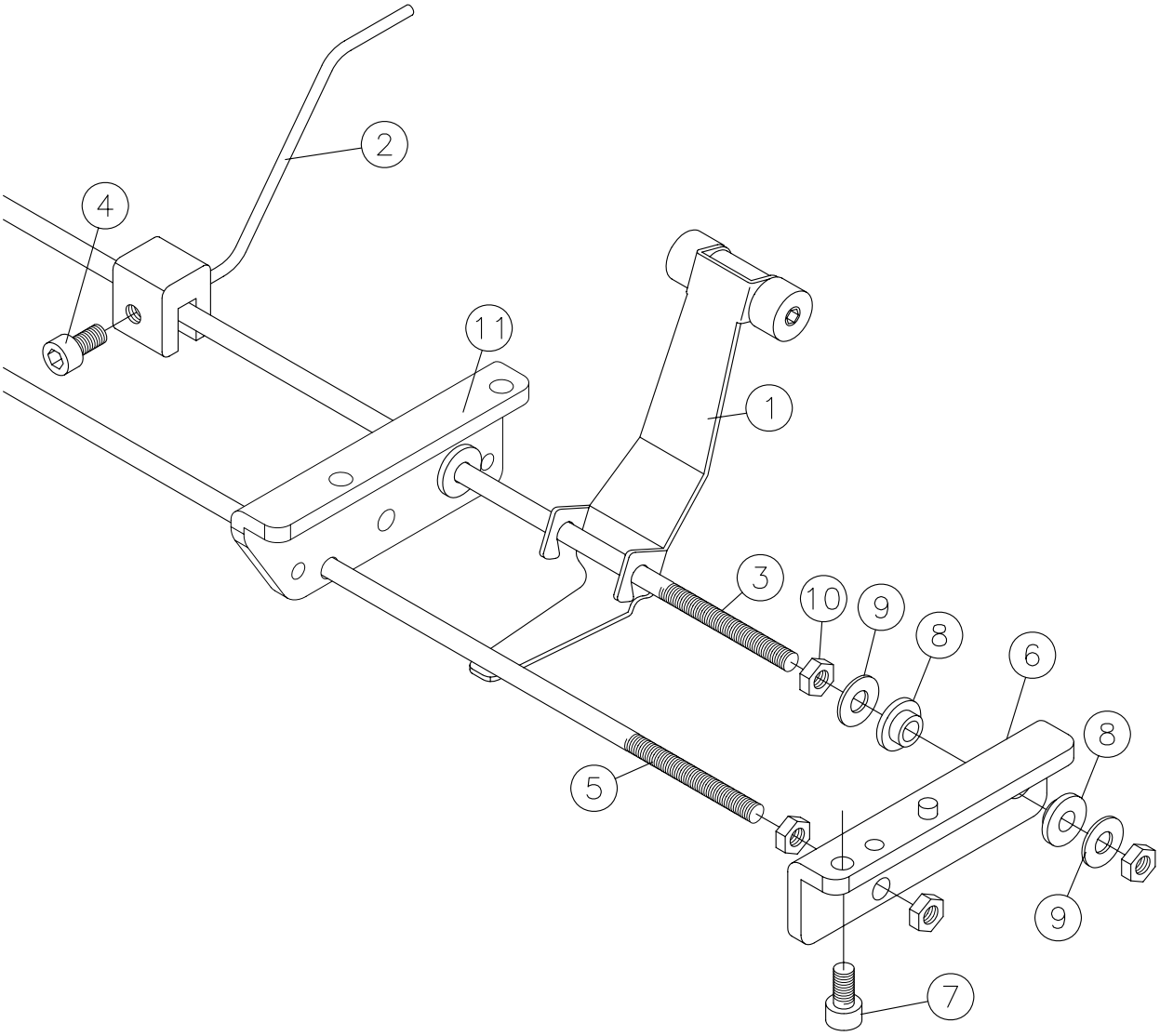

No.	編號 PARTS No.	品名 PARTS NAME	數量 QTY	備註 REMARKS
1	KCF9410A	FABRIC-DROP DETECTING LEVER	2	
2	KCF9700	YARN SEPARATE WIRE	2	
3	KCF9410	TAKE-DOWN STOPPER PAWL	1	30",40",54"
4	KSC0416	SCREW <M4x16>	2	
5	KCF9556	EARTH WIRE	1	30",40",54"
6	KCF9551B	DETECTOR BRACKET	2	313
7	KSC0630	SCREW <M6x30>	3	
8	KCF9554	SPACER COLLAR	5	
9	KSW0004	WASHER	4	
10	KSN0006	NUT	8	
11	KCJ9551B	DETECTOR BRACKET	2	313J&TJ

R

313Series

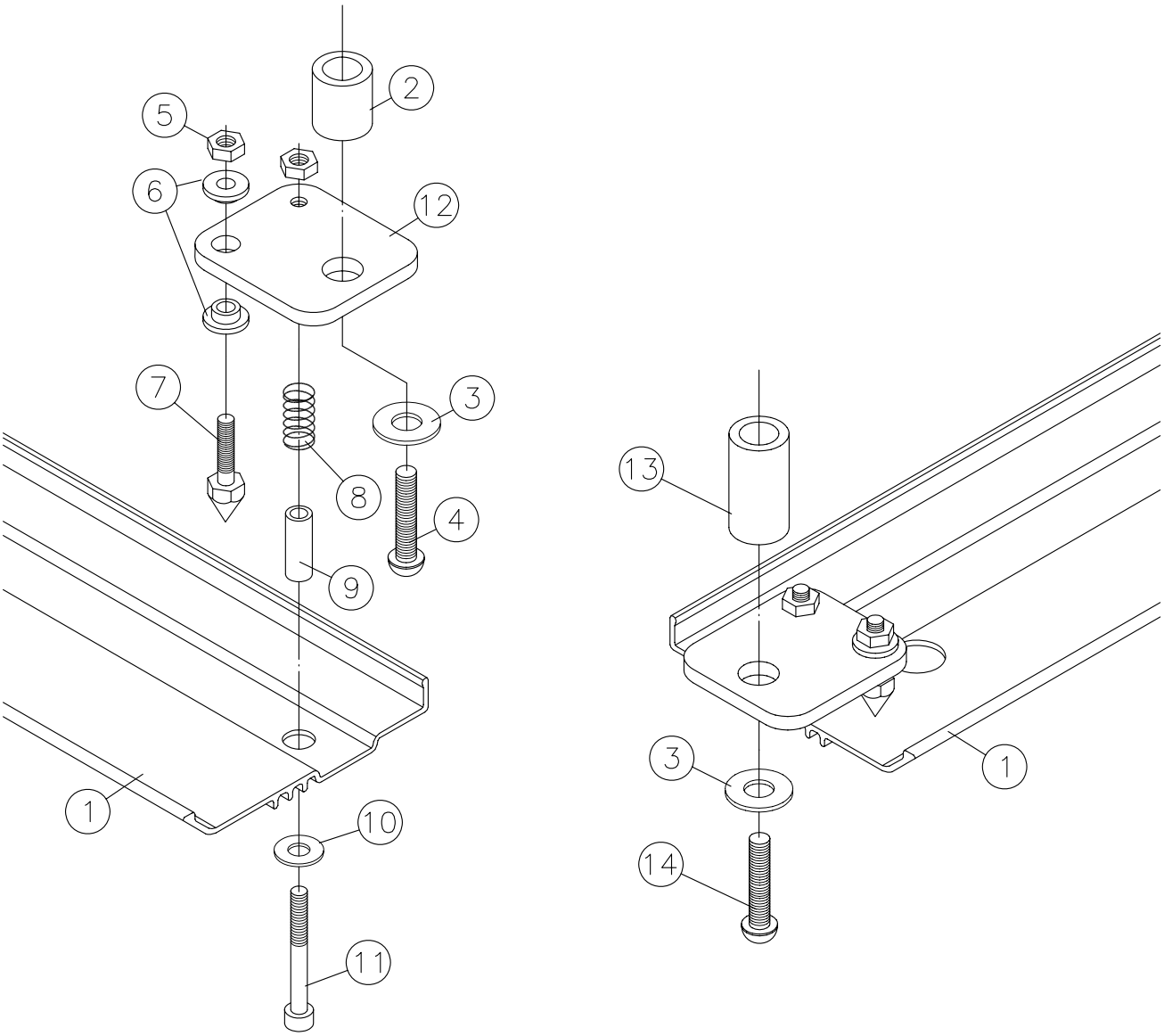

No.	編號 PARTS No.	品名 PARTS NAME	數量 QTY	備註 REMARKS
1	KCF9566	FABRIC DETECTING PLATE	1	30",40",54"
2	KCF9563	COLLAR	2	313
3	KSW0006	WASHER	2	
4	KSD0630	SCREW <M6x30>	2	313
5	KSN0004	NUT	4	
6	KCF9562	SPACER COLLAR	4	
7	KCF95681	SCREW	2	
8	KCF9567	PUSH SPRING	2	
9	KCF9568	COLLAR	2	
10	KSW0004	WASHER	2	
11	KSC0435	SCREW <M4x35>	2	
12	KCF9561	DETECTING PLATE STAY	2	
13	KCJ9563	COLLAR	2	313J&TJ
14	KSD0640	SCREW <M6x40>	2	313J&TJ

R

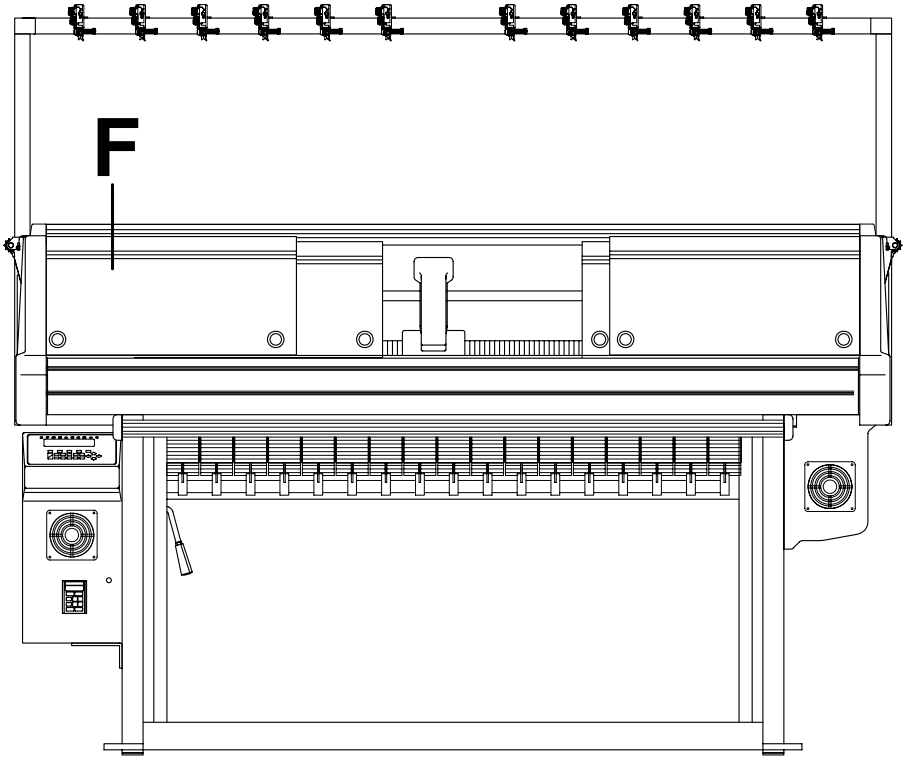

主體與護蓋 /Frame & Cover:

F1-F4

313Series

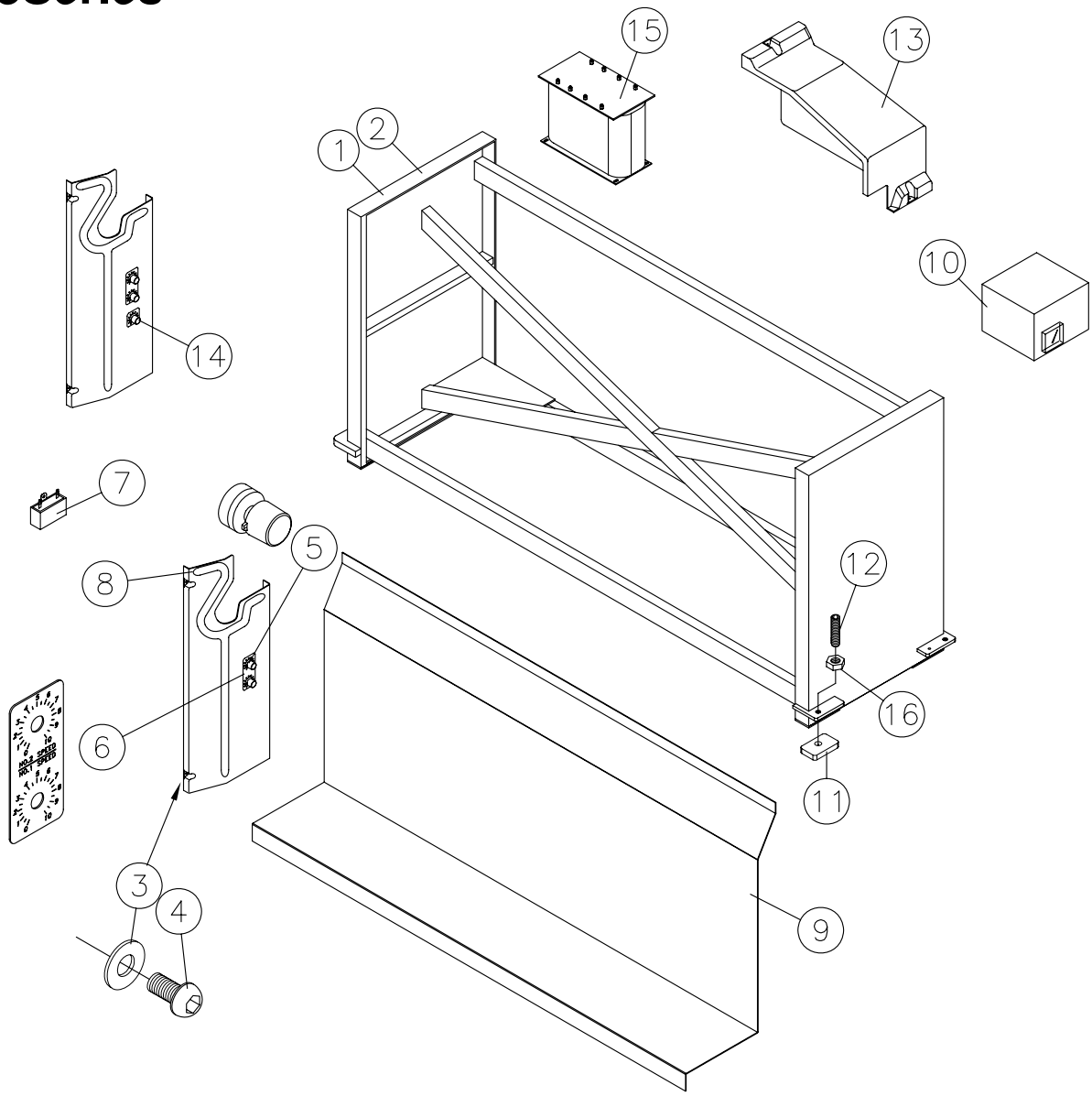

No.	編號 PARTS No.	品名 PARTS NAME	數量 QTY	備註 REMARKS
1	KCK9573	FRAME	1	313 30",40",54"
2	KCDJ202	FRAME	1	313J&TJ
3	KSW0006	WASHER	4	
4	KSD0612	SCREW <M6x12>	4	
5	KCF9532	TURNING KNOB	2	
6	KCF9589	NUMERIC BOARD	1	
7	KCF9534	CAPACITOR FOR TAKE-DOWN MOTOR	1	
8	KCK9577	FRAME COVER <L,R>	2	
9	KCDJ006	FRAME COVER	1	30",40",54"
10	KCF9714	A.V.R	1	
11	KCL3069S6	FRAME BASE	4	
12	KSE1250	SET SCREW <M12X50>	4	
13	KCF9703	COVER	1	
14	KCF9532A	3RD TURNING KNOB ASSY		OPTION
15	KCF9705B	380V TO 220V TRANSFORMER		OPTION
16	KSN0012	UNT	4	

F

313Series

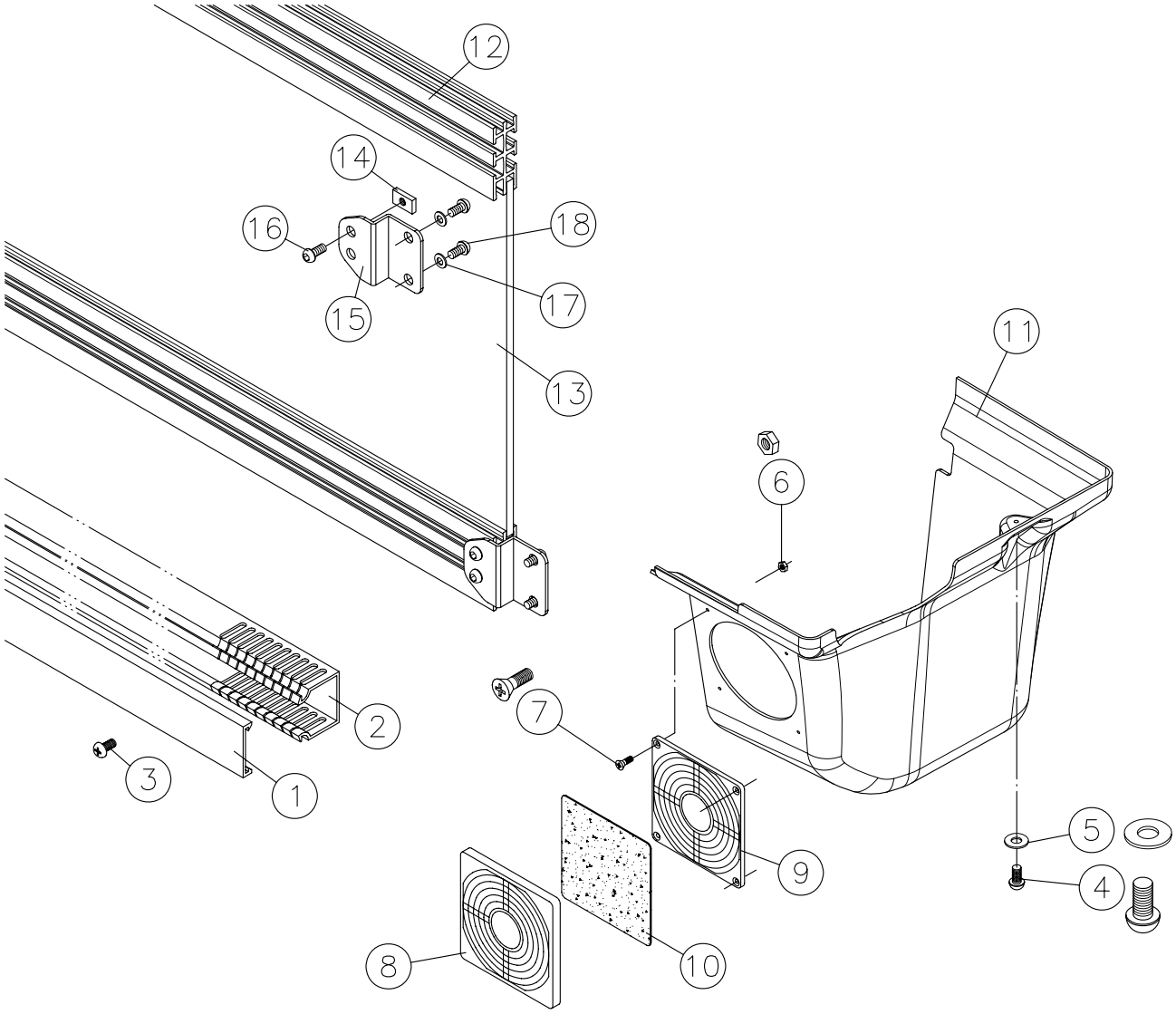

No.	編號 PARTS No.	品名 PARTS NAME	數量 QTY	備註 REMARKS
1	KCF9595	CABLE GUIDE COVER	1	
2	KCF9594	CABLE GUIDE	1	
3	KSR0408	SCREW <M4x8>	4	
4	KSD0612	SCREW <M6x12>	1	30”,40”,54”
5	KSW0006	WASHER	1	30”,40”,54”
6	KSN0004	NUT	4	
7	KSV0410	SCREW <M4x10>	4	
8	KCF9597	FILTER FITTING PLATE <A>	1	
9	KCF9598	FILTER FITTING PLATE <B>	1	
10	KCF9599	FILTER	1	
11	KCK9588	MAIN MOTOR COVER	1	
12	KCDJ012	COVER RAIL	2	30”,40”,54”
13	KCK9586	BACK COVER	2	30”,40”,54”
14	KCF9070	NUT	8	
15	KCL3121	HOLDING PLATE	4	
16	KSD0606	SCREW <M6x6>	8	
17	KSW0006	WASHER	8	
18	KSD0610	SCREW <M6x10>	8	

F

313Series

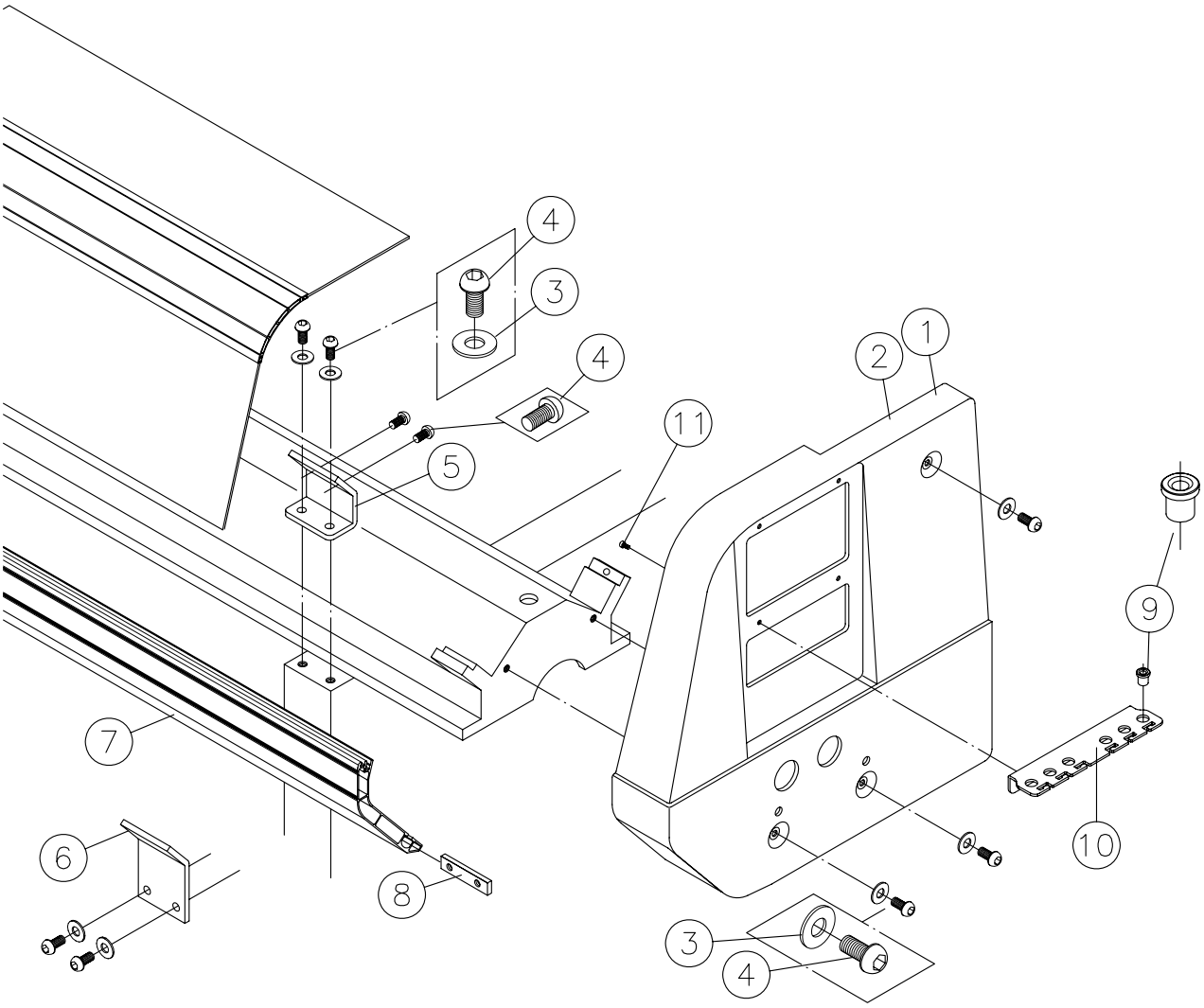

No.	編號 PARTS No.	品名 PARTS NAME	數量 QTY	備註 REMARKS
1	KCK9390	SIDE COVER <L,R>	1	313
2	KCDJ301	SIDE COVER <L,R>	1	313J&TJ
3	KSW0006	WASHER	10	
4	KSD0616	SCREW <M6x16>	14	
5	KCK9585A	BRACKET	2	313
6	KCDJ204	BRACKET	1	313J&TJ
7	KCK9585B	SAFETY GUARD	1	30",40",54"
8	KCF9383B	NUT	2	
9	KCF9336	EYELET	12	
10	KCF9800	YARN GUIDE	2	
11	KSC0410	SCREW <M4x10>	4	

F

313Series

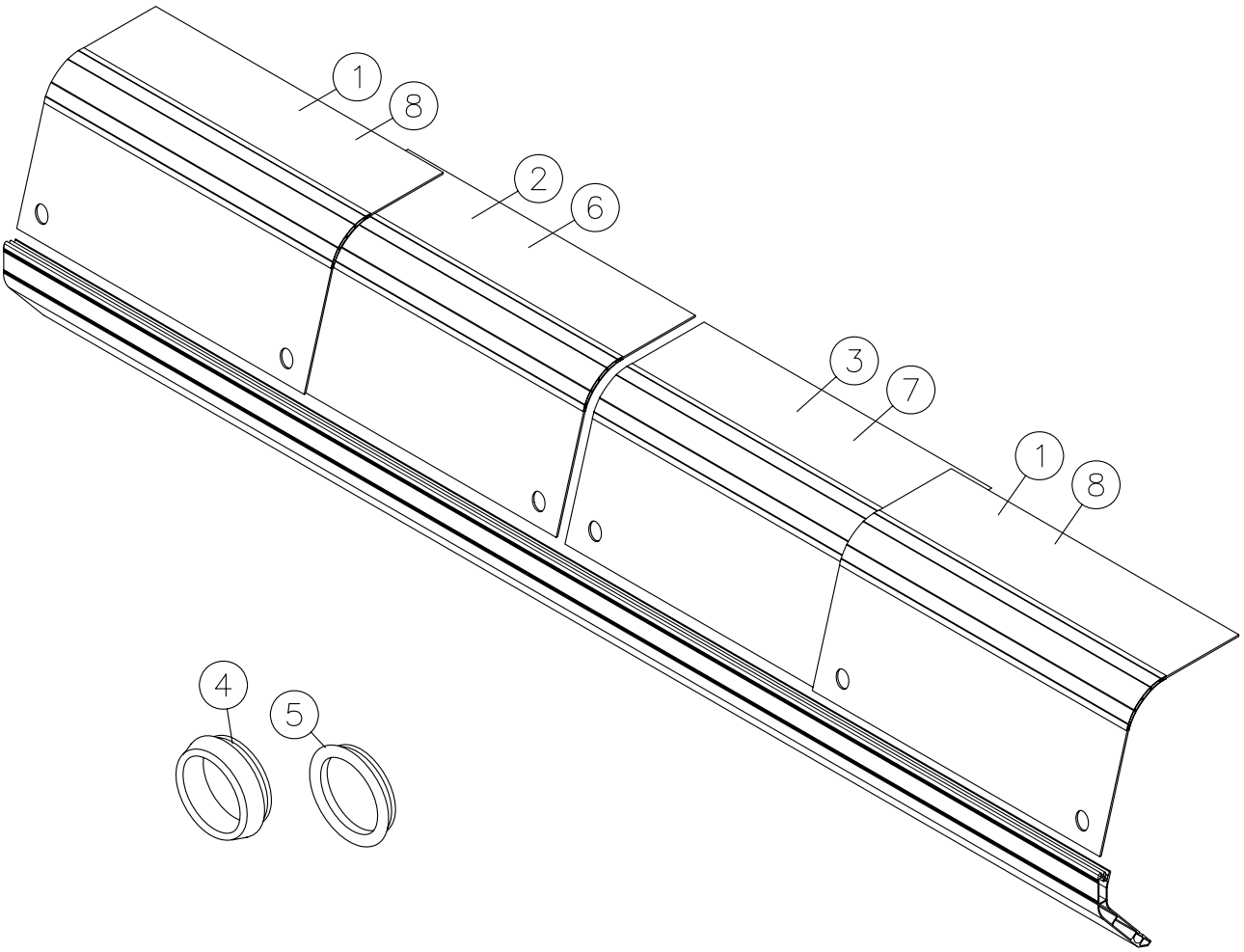

No.	編號 PARTS No.	品名 PARTS NAME	數量 QTY	備註 REMARKS
1	KCK9388A	PLASTIC COVER	2	313
2	KCK9388B	PLASTIC COVER	1	313
3	KCK9388C	PLASTIC COVER	1	313
4	KCF9389A	COVER PULL-KNOB	4	
5	KCF9389B	COVER PULL-KNOB	2	
6	KCDJ520B	PLASTIC COVER	1	313J&TJ
7	KCDJ520C	PLASTIC COVER	1	313J&TJ
8	KCDJ520A	PLASTIC COVER	2	313J&TJ

F

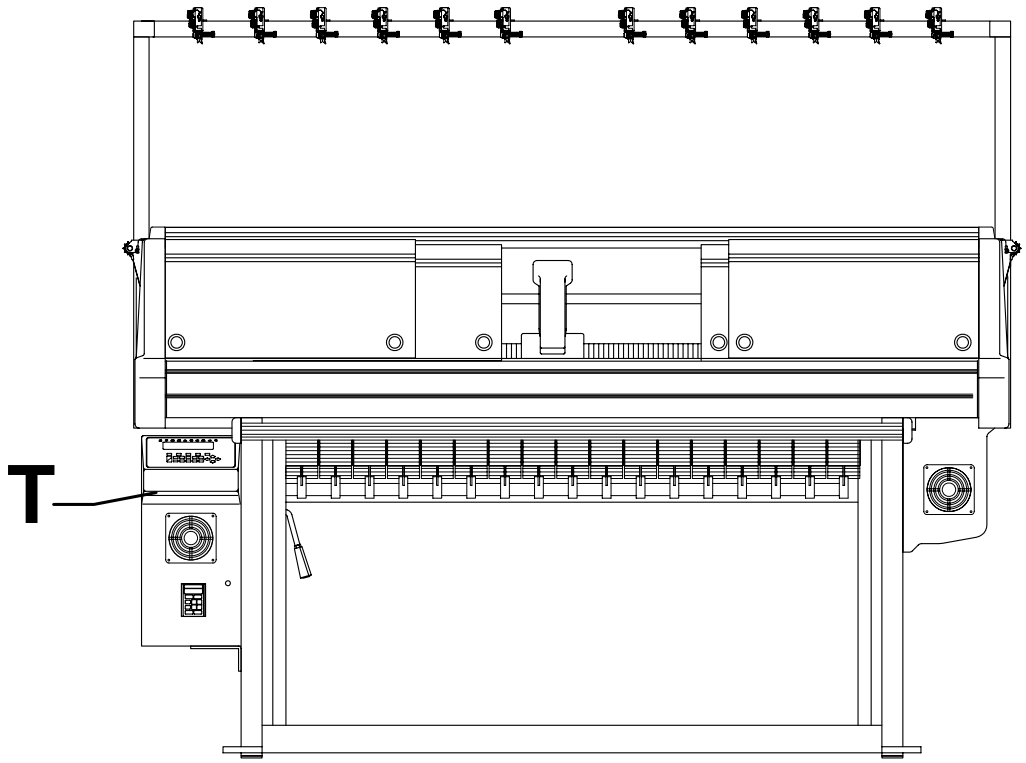

控制單元 /Controller:

T1-T7

313Series

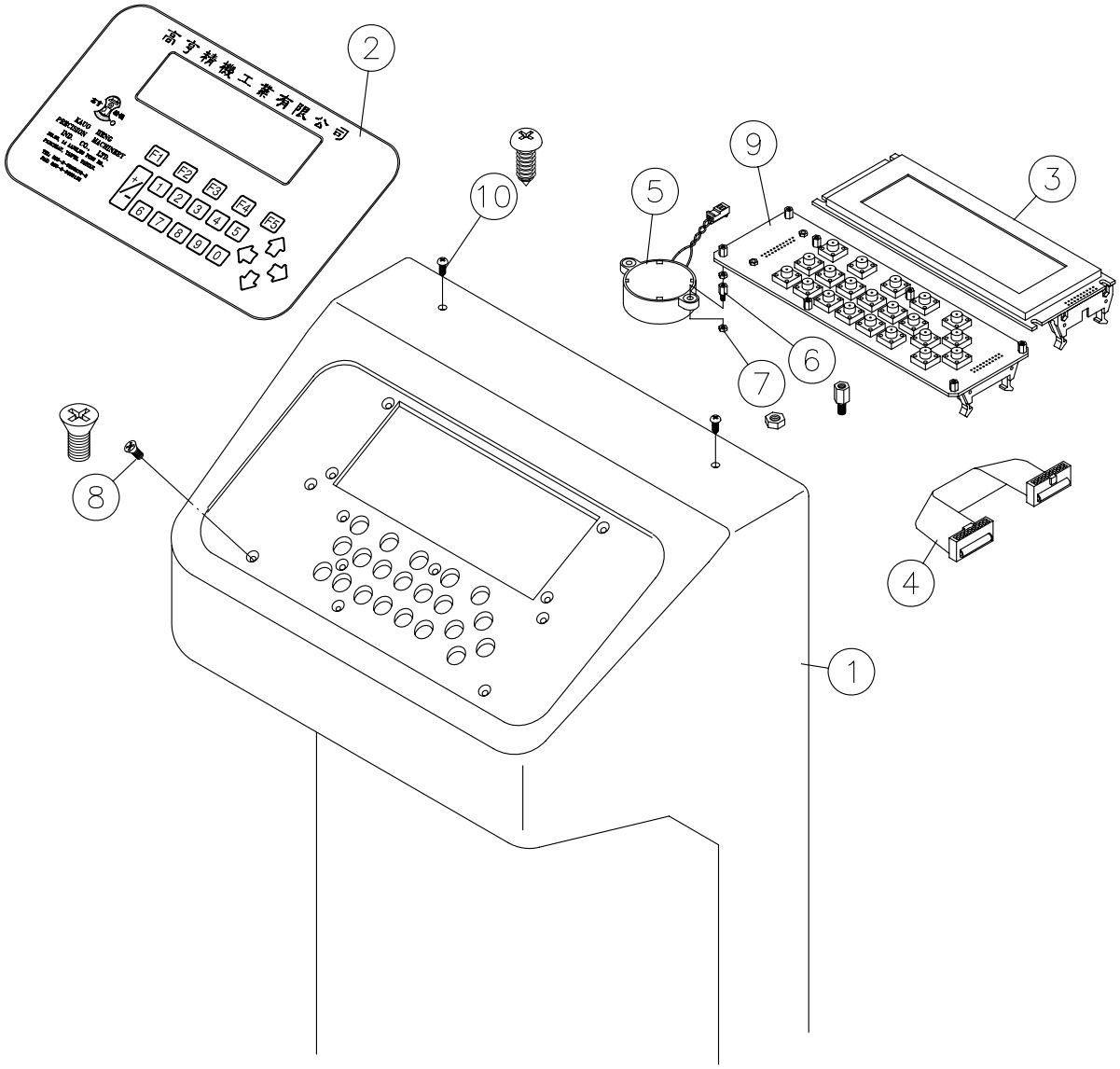

No.	編號 PARTS No.	品名 PARTS NAME	數量 QTY	備註 REMARKS
1	KCK9602	CONTROLLER COVER	1	
2	KCK9600	PANEL	1	
3	KCF9612	LCD	1	
4	KCF9615	CABLE	1	
5	KCF9614	BEEPER	1	
6	KCF9617	SPACER	5	
7	KSN0003	NUT	5	
8	KST0305	SCREW <M3x5>	12	
9	KCF9613	KEY BOARD	1	
10	KSU0412	SCREW <M4x12>	2	

T

313Series

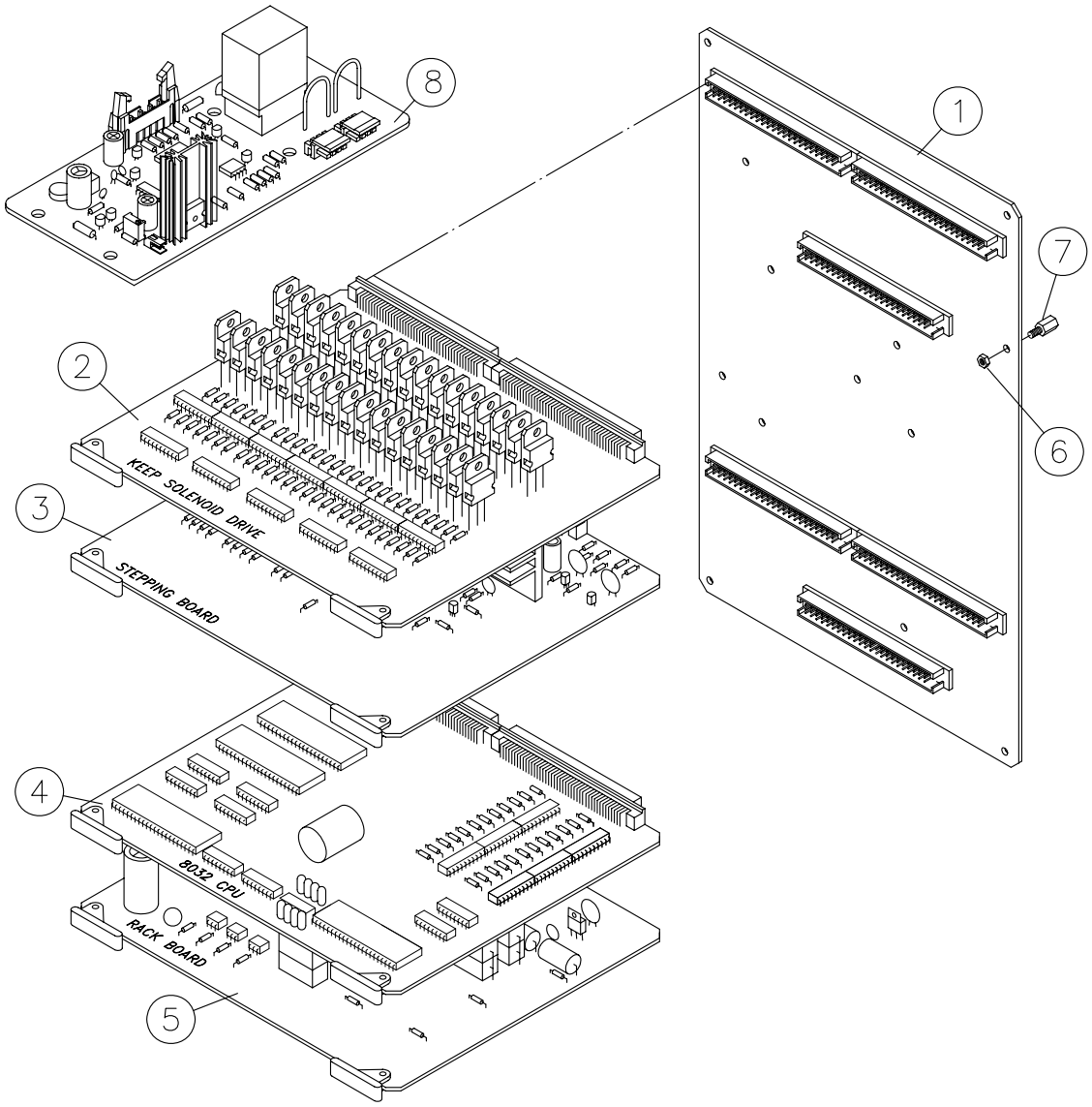

No.	編號 PARTS No.	品名 PARTS NAME	數量 QTY	備註 REMARKS
1	KCK9621	MOTHER BOARD	1	
2	KCF9622	SOLENOID BOARD	1	
3	KCF9623	STEPPING BOARD	1	
4	KCF9626	CPU BOARD	1	
5	KCF9628	RACK BOARD	1	
6	KSN0003	NUT	11	
7	KCF9617	SPACER	11	
8	KCF9629	24V POWER BOARD	1	

T

313Series

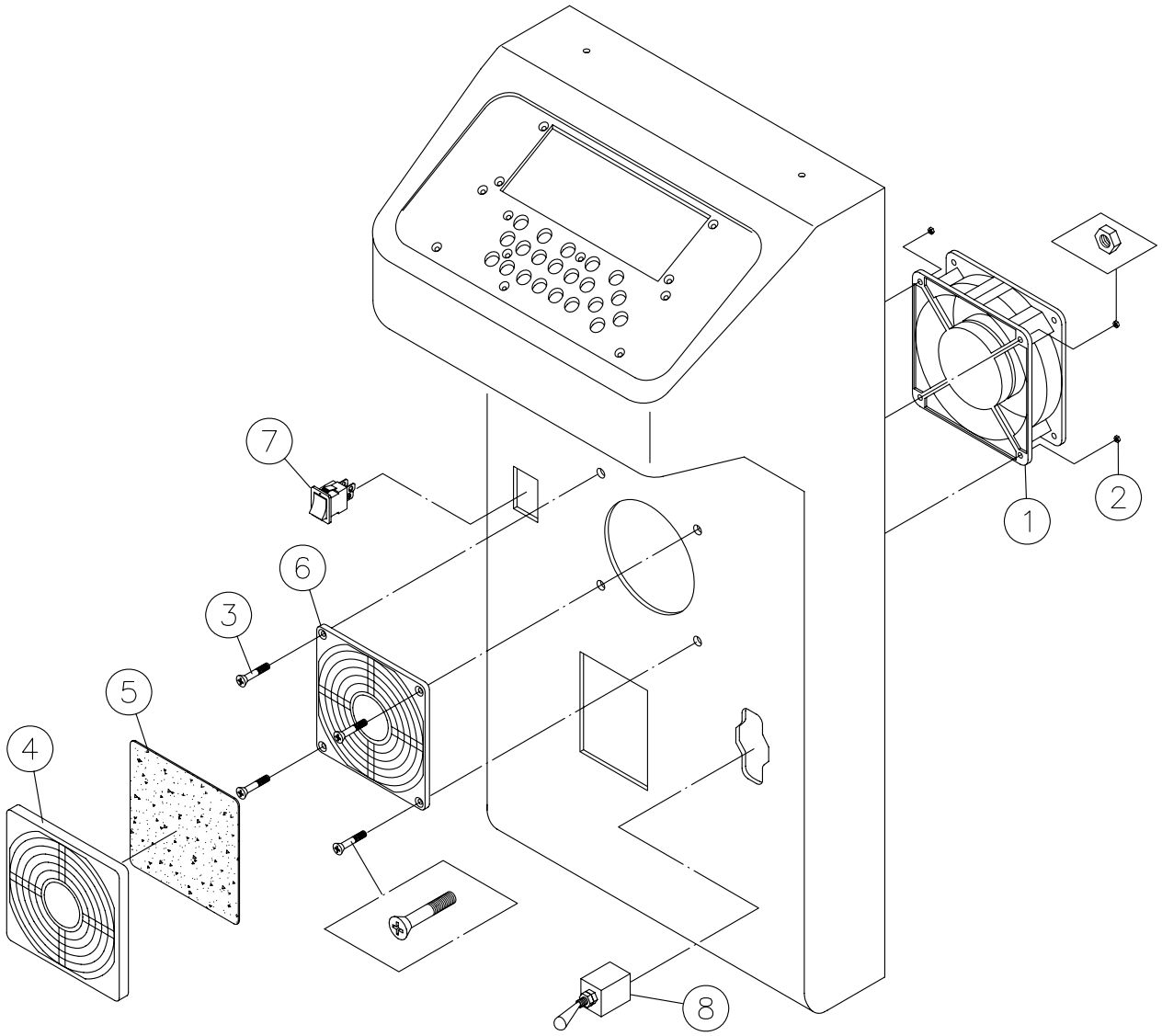

No.	編號 PARTS No.	品名 PARTS NAME	數量 QTY	備註 REMARKS
1	KCF9620	FAN	1	
2	KSN0004	NUT	4	
3	KSV0415	SCREW <M4x15>	4	
4	KCF9597	FILTER FITTING PLATE(A)	1	
5	KCF9599	FILTER	1	
6	KCF9598	FILTER FITTING PLATE(B)	1	
7	KCF9637	FLUORESCENT LAMP SWITCH	1	
8	KCK9636	SWITCH	1	

T

313Series

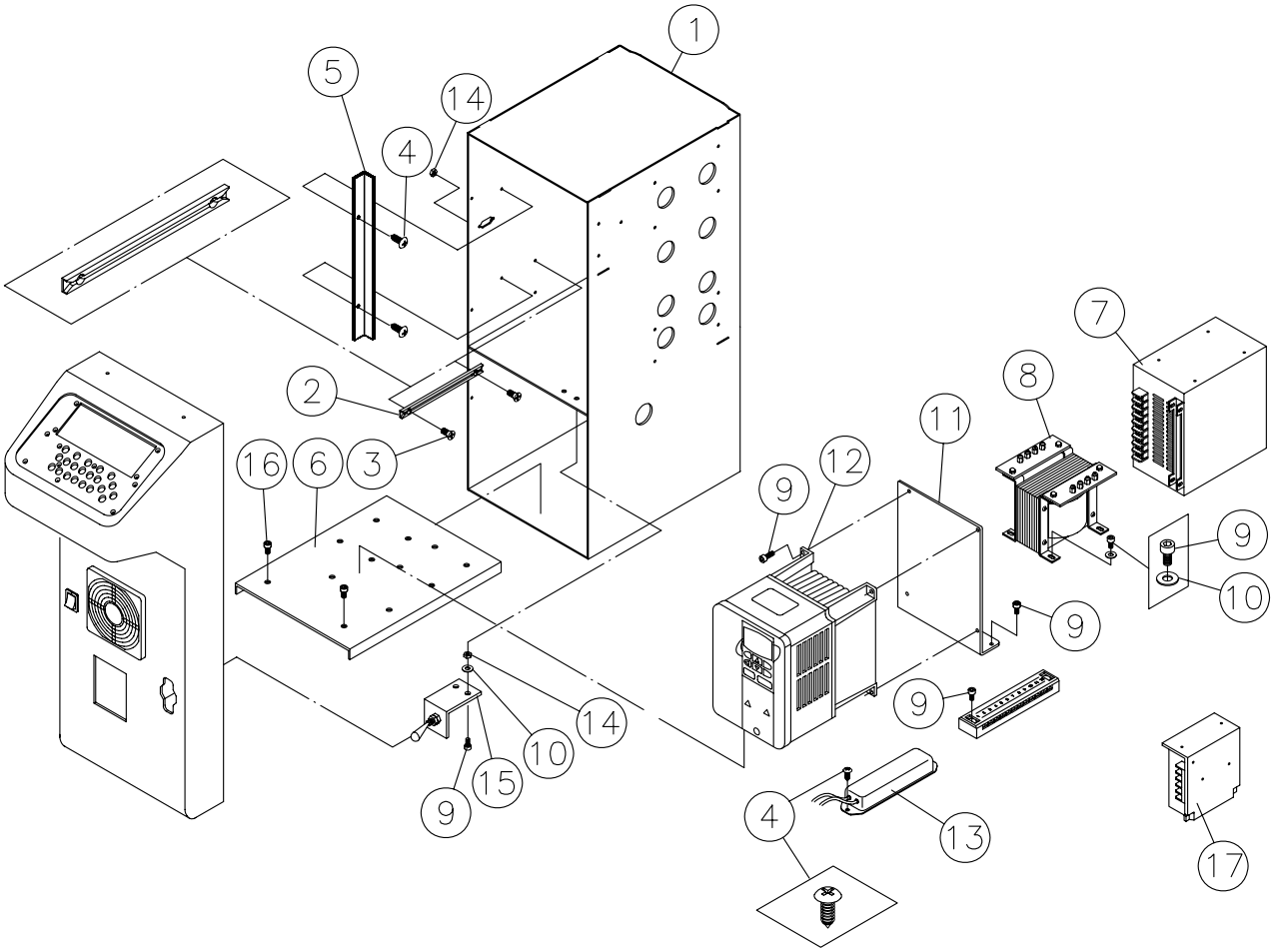

No.	編號 PARTS No.	品名 PARTS NAME	數量 QTY	備註 REMARKS
1	KCK9607	FITTING COVER	1	
2	KCF9631	PCB GUID	8	
3	KSV0305	SCREW <M3x5>	16	
4	KSU0412	SCREW <M4x12>	4	
5	KCK9608	FITTING PLATE	2	
6	KCK9605	FITTING PLATE	1	
7	KCF9632	POWER SUPPLYIER	1	
8	KCF9633	TRANSFORMER	1	
9	KSC0408	SCREW <M4x8>	14	
10	KSW0004	WASHER	6	
11	KCK9604	FITTING PLATE	1	
12	KCF9634	INVERTER	1	
13	KCF9635	RESISTOR	1	
14	KSN0004	NUT	16	
15	KCK9606	FITTING PLATE	1	
16	KSC0616	SCREW <M6x16>	2	
17	KCG9713	5V POWER SUPPLIER	1	313TJ

T

313Series

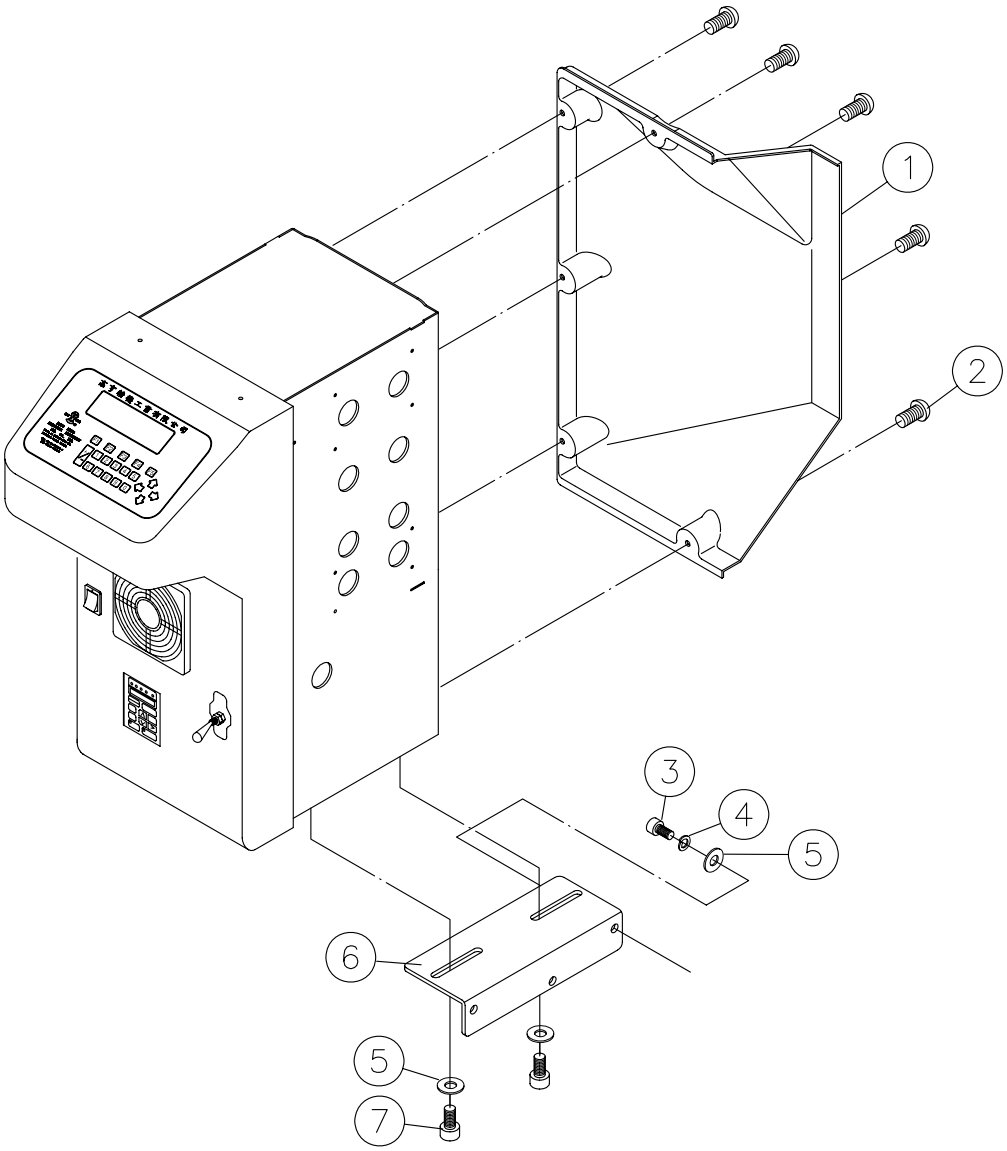

No.	編號 PARTS No.	品名 PARTS NAME	數量 QTY	備註 REMARKS
1	KCK96071	COVER	1	
2	KSU0412	SCREW <M4x12>	5	
3	KSC0612	SCREW <M6x12>	3	
4	KSWS006	SPRING WASHER	3	
5	KSW0006	WASHER	5	
6	KCK9619	FITTTING PLATE	1	
7	KSC0616	SCREW <M6x16>	2	

T

313Series

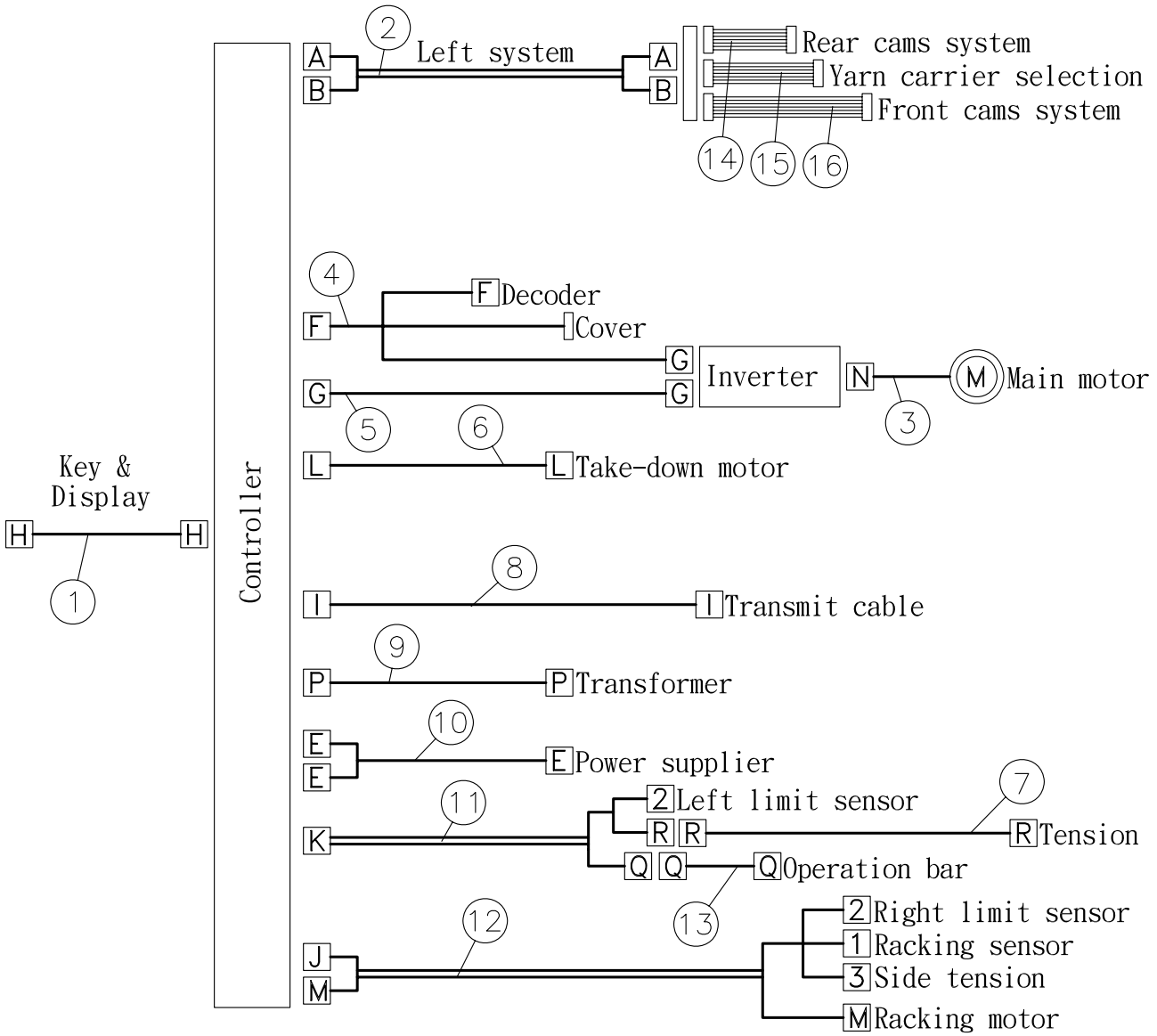

No.	編號 PARTS No.	品名 PARTS NAME	數量 QTY	備註 REMARKS
1	KCF9661	CABLE	1	
2	KCF9662	CABLE	1	
3	KCF9674	CABLE	1	
4	KCF9664	CABLE	1	
5	KCF9665	CABLE	1	
6	KCF9666	CABLE	1	
7	KCF9667	CABLE	1	
8	KCF9668	CABLE	1	
9	KCF9669	CABLE	1	
10	KCF9670	CABLE	1	
11	KCF9671	CABLE	1	
12	KCF9672	CABLE	1	
13	KCF9673	CABLE	1	
14	KCF9675	CABLE	2	
15	KCF9676	CABLE	2	
16	KCF9677	CABLE	2	

T

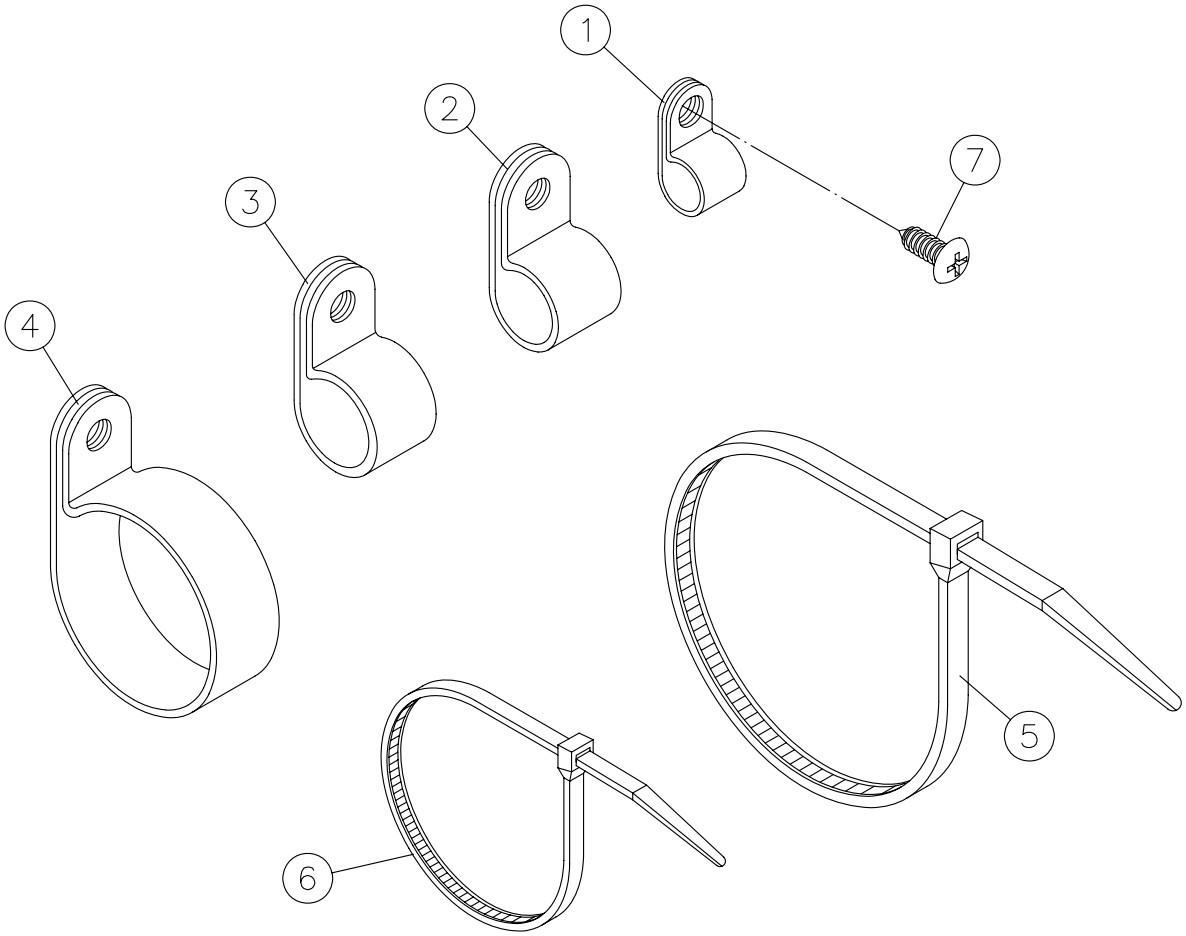

No.	編號 PARTS No.	品名 PARTS NAME	數量 QTY	備註 REMARKS
1	KCF9638	CABLE CLAMP	12	
2	KCF9639	CABLE CLAMP	7	
3	KCF9640	CABLE CLAMP	9	
4	KCF9641	CABLE CLAMP	1	
5	KCF9642	CABLE TIES	12	
6	KCF9643	CABLE TIES	18	
7	KSU0412	SCREW <M4x12>	29	

T

KAUOHENG

KH-313 SERIES SERVICE MANUAL

電腦橫編織機 KH

COMPUTERIZED FLAT KNITTING MACHINE

1. LCD

1) LCD IS SHOWN NOTHING, BUT CAMS CAN STILL WORK.

2) LCD IS SHOWN NOTHING, AND CAMS CAN NOT WORK.

【PART NO.】

1) LCD IS SHOWN NOTHING, BUT CAMS CAN STILL WORK.

Check steps and solution：

1. Make sure H cable (mother board – keyboard) is connected well.

2. Make sure key board – LCD is connected well.

3. Change CPU board or LCD or H cable.

2) LCD IS SHOWN NOTHING, AND CAMS CAN NOT WORK.

Check steps and solution：

1. Make sure AC power input – output is correct.
2. Make sure 3 fuse (5A) inside controller are not burnt-out.
3. Make sure A.V.R is in a good condition.
4. Make sure fuse (5A) in A.V.R is not burnt-out.

   NO burnt-out：Change CPU board or rack board.

   Burnt-out：Turn off fluorescent lamp, change new fuse and turn on the power again,

   4.1 LCD is shown normally：Change ballast of fluorescent lamp. (Please check in turn if there are more than 2 fluorescent lamps.

   4.2 LCD is still shown nothing：Change new fuse again； then change transformer or power supplier.

LCD 【PART NO.】

1.LCD：KCF9612	2.MOTHER BOARD：KCF9621
3.H CABLE：KCF9661	4.KEYBOARD：KCF9613
5.A.V.R：KCF9714	6.CPU BOARD：KCF9626
7.RACK BOARD：KCF9628	8.TRANSFORMER：KCF9633
9.POWER SUPPLIER：KCF9632	

2. LEFT LIMIT SENSOR

1) “LEFT” IS SHOWN ON THE SCREEN,
BUT LEFT LIMIT SENSOR IS ON.

2) “LEFT” IS SHOWN ON THE SCREEN,
AND LEFT LIMIT SENSOR IS OFF.

【PART NO.】

1) “LEFT” IS SHOWN ON THE SCREEN, BUT LEFT LIMIT SENSOR IS ON.

Check steps and solution：

1. Make sure F cable - sensor is connected well.

2. Change sensor or CPU board or mother board.

2) “LEFT” IS SHOWN ON THE SCREEN, AND LEFT LIMIT SENSOR IS OFF.

Check steps and solution：

Make sure mother board inside the controller is without short condition.

1. **Yellow light is “ON”**：Make sure the green light is “ON”

“ON”：1.1 Make sure F cable - sensor is connected well.

1.2 Change sensor or CPU board or mother board.

“OFF”：Change power supplier.

2. **Yellow light is “OFF”**：

2.1 Change CPU board or mother board.

3. **Yellow light is “TWINKLE”**：It means 24V short.

Testing steps as followings：

3.1 Turn off the power, pull off AB cable from carriage and turn on the power again.

Yellow light is “ON” - normal：Carriage is 24V short. Check it.

Yellow light is “OFF” - abnormal：Carriage is no problem.

3.2 Carriages are problem：

3.2.1 Turn off the power, plug AB cable into carriage and pull off front cables (KCF9677) of carriage to test.

Yellow light is “ON” - normal：

Carriage is 24V short. Check solenoid and PC board (KCE0002).

Yellow light is “TWINKLE”：

Carriage is no problem.

3.2.2 Turn off the power, plug AB cable into carriage and pull off rear cables (KCF9675) of carriage to test.

Yellow light is “ON” - normal：

Carriages is 24V short. Check solenoid and PC board (KCE0002).

Yellow light is “TWINKLE”：

Carriages is no problem.

3.2.3 Turn off the power, pull off cable (KCF9676) and turn on the power.

Yellow light is “ON” - normal：

PC board (KCE0001) is 24V short. Check solenoid and make sure screws on PC board (KCE0001) are not loose.

Yellow light is “TWINKLE”：

PC board (KCE0001) is no problem.

3.4 Carriages are no problem：

Turn off the power, pull off cable (KCE9667) and sensor (KCE9034 & KCE9407) in turn to find which part has problem.

LEFT LIMIT SEMSOR 【PART NO.】

1.SENSOR：KCF9034	2.MOTHER BOARD：KCF9621
3.F CABLE：KCF9664	4.CPU BOARD：KCF9626
5.TOP TENSION：KCF90031N	6.CABLE：KCF9667
7.AB CABLE：KCF9662	8.SENSOR OF RACKING：KCF9407
11.SOLENOID：KCE2501	12.CABLE：KCF9677
13.CABLE：KCF9675	14.CABLE：KCF9676
15.PC BOARD：KCE0002	16.PC BOARD：KCE0001
17.POWER SUPPLIER：KCF9632	

3. RACK

1) “RACK” IS SHOWN ON THE SCREEN BEFORE RUNNING.

2) “RACK” IS SHOWN ON THE SCREEN WHEN RUNNING.

3) TAKE-DOWN TURNS AUTOMATICALLY OR RACKING RUNS AUTOMATICALLY WHEN TURNING ON THE POWER.

【PART NO.】

1) “RACK” IS SHOWN ON THE SCREEN BEFORE RUNNING.

Check steps and solution：

1. Make sure sensor of racking is in correct position.

2. Make sure sensor of racking is “ON”.

“OFF”：Change sensor of racking.

“ON”：Change CPU board. Change sensor of racking again if problem is still occurred.

2) “RACK IS SHOWN ON THE SCREEN WHEN RUNNING.

Check steps and solution：

1. Put top tension in out-of-order condition to make sure signal lamp will be “ON”.

   “ON”：It is no problem and make sure sensor of racking is in correct position.

   “OFF”： It means 24V short. Check steps are the same with “LEFT” is shown on the screen.

3) TAKE-DOWN TURNS AUTOMATICALLY OR RACKING RUNS AUTOMATICALLY WHEN TURNING ON THE POWER.

Check steps and solution：

1. Change rack board.

2. Change CPU board if problem is still occurred.

RACK 【PART NO.】

1.SENSOR OF RACKING：KCF9407	2.TOP TENSION：KCF90031N
3.RACK BOARD：KCF9628	4.CPU BOARD：KCF9626

4. YARN CARRIER SOLENOIDS & CAMS

【PART NO.】

YARN CARRIER SOLENOIDS & CAMS

Check steps and solution：

Enter into “5. TEST”

```
1.EDIT     2.RUN
3.FILE     4.FUNC
5.TEST
```

Select “4. CAM” to test if cams work with any problem

```
1.RACK     2.MOTOR
3.SENSO    4.CAM
5.TK-DN    6.STITC
```

1. Test solenoids without any problem and check if cams move properly?
2. Test is no problem but sometimes is problem when running. Please change solenoids. If problem is still occurred, change A cable.
3. There is problem and one of solenoids can not work：
   - 3.1 Make sure solenoids get problem and change new ones.
   - 3.2 Exchange solenoid boards with another machine, if the problem is occurred on another machine, change a new solenoid board.
   - 3.3 Change A cable or PC board (KCF9204) or cable (KCF9675-77) or PC board (KCE0001) or PC board (KCE0002) or mother board.

Remark：For TJ machine, it should be exchanged with PC board (KCG0001) to test：then check if cable is connected well or not.

YARN CARRIER SOLENOIDS & CAMS 【PART NO.】

1.SOLENOID：KCE2501	2.AB CABLE：KCF9662
3.SOLENOID BOARD：KCF9622	4.MOTHER BOARD：KCF9621
5.PC BOARD：KCG0001	6.CABLE：KCF9677
7.CABLE：KCF9675	8.CABLE：KCF9676
9.PC BOARD：KCF9204	10.PC BOARD：KCE0001
11.PC BOARD：KCE0002	

5. MEMORY FULL

【PART NO.】

MEMORY FULL

Check steps and solution：

1. Enter into 3. FILE

```
1.EDIT    2.RUN
3.FILE    4.FUNC
5.TEST
```

→

```
1.DISP    3.DEL
3.COPY    4.TRANS
5.REVD    6.CLEAR
```

2. Select 6. CLEAR：Clear all files

```
DO YOU CLR:
SURE                EXIT
```

```
DELETE ALL FILE !
SURE                EXIT
```

```
DELETE ALL FILE :555
SURE                EXIT
```

Enter code NO：555

3. Memory full：Check if parameter was lost or not. If inside parameter was lost, it is properly because of low battery of CPU board. Please change a new battery. Also change CPU board if problem is still occurred.

MEMORY FULL 【PART NO.】

1.CPU BOARD：KCF9626	

6. STITCH

【PART NO.】

STITCH

Check steps and solution：

1. Enter into 5. TEST

```
1.EDIT      2.RUN
3.FILE      4.FUNC
5.TEST
```

2. Select 6. STITC

```
1.RACK      2.MOTOR
3.SENSO     4.CAM
5.TK-DN     6.STITC
```

3. Start to test front & rear

Test is O.K. But stitch is not good.	a. Check stitch control teeth plate or b. Change stepping board
Test is O.K. But “STITC” is shown.	a. Change B cable

3.1 Exchange stepping boards with another machine (NO.2), if the problem is occurred on another machine, change a new stepping board.

3.2 Check stitch control teeth plate is without any problem, if it was damaged , change a new one.

3.3 Exchange with front & rear PC boards (KCE0002), if the problem is occurred from front to rear side, change a new one.

3.4 Exchange with front & rear stepping motors, if the problem is occurred from front to rear side, change a new one.

3.5 Change B cable or PC board (KCF9204) or cable (KCF9675-77) or mother board.

STITCH 【PART NO.】

1.STITCH CONTROL TEETH PLATE：KCF9145	2.STEPPING BOARD：KCF9623
3.AB CABLE：KCF9662	4.STEPPING MOTOR：KCM2004A
5.PC BOARD：KCE0002	6.PC BOARD：KCF9204
7.CABLE：KCF9675-9677	8.MOTHER BOARD：KCF9621

7. OTHERS

1) IT CAN NOT START WITH OPERATION BAR WHEN ENTERING RUN MODE /【PART NO.】
2) FILE IS MISSING, PROGRAM AND PARAMETERS ARE IN DISORDER WHEN ENTERING RUN MODE /【PART NO.】
3) TAKE-DOWN MOTOR CAN NOT WORK /【PART NO.】
4) TAKE-DOWN DOESN’T TURN STABLY /【PART NO.】
5) CARRIAGE WON’T TURN BACK WHEN RUNNING /【PART NO.】
6) SIGNAL LAMP IS OUT OF ORDER /【PART NO.】
7) IT CAN NOT GET RID OF ERROR WHEN ENTERING RUN MODE /【PART NO.】
8) STITCH CAMS CAN NOT WORK /【PART NO.】

1) IT CAN NOT START WITH OPERATION BAR WHEN ENTERING RUN MODE.

Check steps and solution：

1. Make sure PC board (KCF9372) – K cable – mother board is connected well.
2. Change PC board (KCF9372) or CPU board or mother board.

【PART NO.】

1.PC BOARD：KCF9372	2.K CABLE：KCF9671
3.MOTHER BOARD：KCF9621	4.CPU BOARD：KCF9626

2) FILE IS MISSING, PROGRAM AND PARAMETERS ARE IN DISORDER WHEN ENTERING RUN MODE.

Check steps and solution：

1. Low battery of CPU board, so please change a new battery.
2. Change CPU board if problem can not be solved.

【PART NO.】

1.CPU BOARD：KCF9626	

3) TAKE-DOWN MOTOR CAN NOT WORK.

Check steps and solution：

1. Make sure L cable – take-down motor is connected well.

2. Make sure take-down gear run smoothly without any problem.

3. Change CPU board or rack board or turning knob assy. or take-down motor.

【PART NO.】

1.TURNING KNOB ASSY.：KCF9532	2.TAKE-DOWN GEAR：KCF9526A
3.TAKE-DOWN MOTOR：KCF9526	4.L CABLE：KCF9666
5.CPU BOARD：KCF9626	

4) TAKE-DOWN DOESN'T TURN STABLY.

Check steps and solution：

1. Make sure take-down was not obstructed.

2. Change turning knob assy. or take-down gear or take-down motor.

【PART NO.】

1.TURNING KNOB ASSY.：KCF9532	2.TAKE-DOWN GEAR：KCF9526A
3.TAKE-DOWN MOTOR：KCF9526	

5) CARRIAGE WON'T TURN BACK WHEN RUNNING.

Check steps and solution：

1. Check mother board – K cable & F cable & J cable are connected well.
2. Change sensor NO.2 & NO.3 and right limit sensor.
3. If problem is still occurred, please change CPU board or inverter or mother board in turn.

【PART NO.】

1.MOTHER BOARD：KCF9621	2.K CABLE：KCF9671
3.F CABLE：KCF9664	4.J CABLE：KCF9672
5.SENSOR：KCF9034	6.CPU BOARD：KCF9626
7.INVERTER：KCF9634	

6) SIGNAL LAMP IS OUT OF ORDER.

Check steps and solution：

1. Check cable of signal lamp is no problem.

2. Change signal lamp.

3. Change mother board or inverter.

【PART NO.】

1.SIGNAL LAMP(G)：KCF9001G	2.SIGNAL LAMP(Y)：KCF9001Y
3.MOTHER BAORD：KCF9621	4.INVERTER：KCF9634

7) IT CAN NOT GET RID OF ERROR WHEN ENTERING RUN MODE.

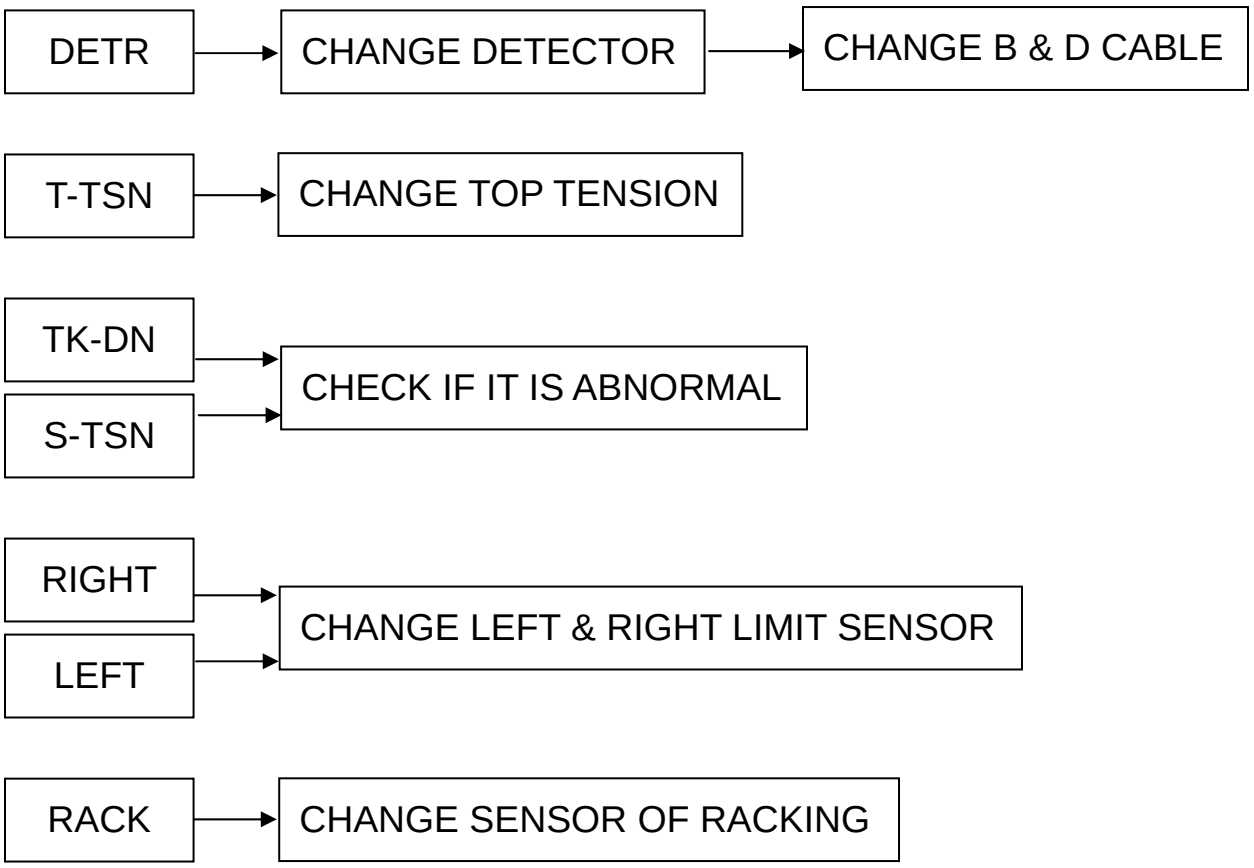

☆If it still can not get rid of error, please change CPU board.

【PART NO.】

1.TURNING KNOB ASSY.：KCF9532	2.TAKE-DOWN GEAR：KCF9526A
3.TAKE-DOWN MOTOR：KCF9526	4.L CABLE：KCF9666
5.CPU BOARD：KCF9626	

8) STITCH CAMS CAN NOT WORK.

Check steps and solution：

1. Carriage can not work：

   Check steps are the same with “LEFT” is shown on the screen.

2. Check green light on power supplier is “OFF”；then change one new power supplier.

【PART NO.】

1.POWER SUPPLIER：KCF9632	

CABLE CONTROL

<table>
<tr><td>A CABLE</td><td>1. FRONT CAM：
<table><tr><td>313</td><td>4 x SOLENOIDS</td></tr><tr><td>313J</td><td>5 x SOLENOIDS</td></tr><tr><td>313TJ</td><td>6 x SOLENOIDS, PC BOARD (KCG0001)</td></tr></table>2. REAR CAM：
<table><tr><td>313</td><td>4 x SOLENOIDS</td></tr><tr><td>313J</td><td>5 x SOLENOIDS</td></tr><tr><td>313TJ</td><td>6 x SOLENOIDS, PC BOARD (KCG0001)</td></tr></table>3. PC BOARD：6 x SOLENOIDS</td></tr>
<tr><td>B CABLE</td><td>1. FRONT STITCH (STITCH MOTOR & PC BOARD-KCE0002)
2. REAR STITCH (STITCH MOTOR & PC BOARD-KCE0002)
3. FRONT DETECTOR
4. REAR DETECTOR</td></tr>
<tr><td>E CABLE</td><td>24V POWER DC</td></tr>
<tr><td>F CABLE</td><td>INVERTER、SENSOR NO.1 & NO.3</td></tr>
<tr><td>H CABLE</td><td>LCD、KEYBOARD、BUZZER CONTROL WIRE</td></tr>
<tr><td>I CABLE</td><td>TRANSMISSION CONTROL WIRE</td></tr>
<tr><td>J CABLE</td><td>RACKING SIGNAL、RIGHT SIDE TENSION、RIGHT SENSOR CABLE</td></tr>
<tr><td>K CABLE</td><td>OPERATION BAR、LEFT SIDE TENSION、TOP TENSION CONTROL WIRE、SENSOR NO.2</td></tr>
<tr><td>L CABLE</td><td>TAKE-DOWN POWER CONTROL WIRE</td></tr>
<tr><td>M CABLE</td><td>RACKING POWER CONTROL WIRE</td></tr>
</table>

CHANGE SOLENOIDS

A.	PROGRAM IS “KNIT” BUT ACTION IS “TUCK”	CHANGE SOLENOID NO.3
B.	PROGRAM IS “ALL KNIT” BUT ACTION IS “HIGH BUTT KNIT, LOW BUTT TUCK”	CHANGE SOLENOID NO.3 & 4
C.	PROGRAM IS “ALL KNIT” BUT ACTION IS “HIGH BUTT KNIT”	CHANGE SOLENOID NO.1 & 2
D.	PROGRAM IS “ KNIT” BUT ACTION IS “MISS”	CHANGE SOLENOID NO.2
E.	PROGRAM IS “MISS” BUT ACTION IS “TUCK”	CHANGE SOLENOID NO.2 & 5

☆ Please pay attention to the height of cam action after changing solenoids.

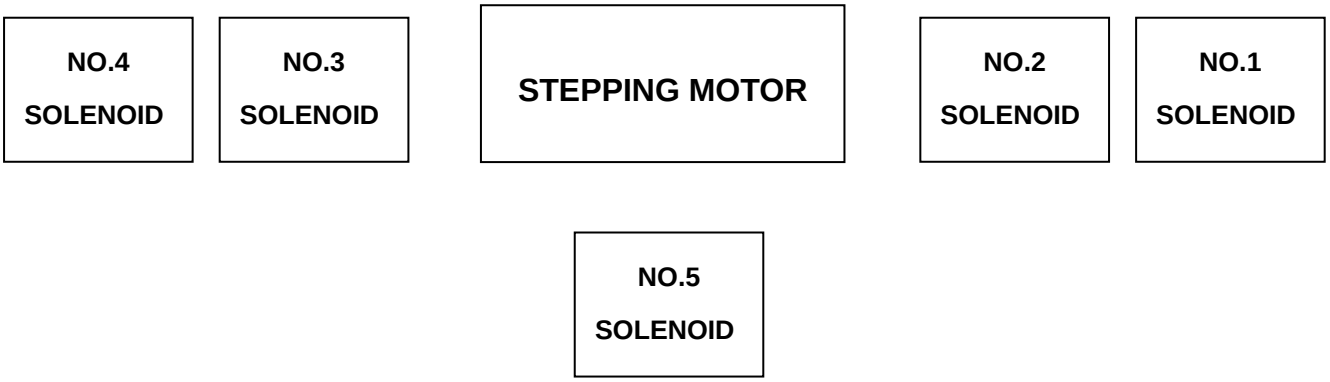

PC BOARD CONTROL

NO.1	LEFT SYSTEM – CAM ACTION
NO.2	LEFT SYSTEM – STITCH ACTION
NO.3	CPU BOARD
NO.4	RACK BOARD (RACKING、TAKE-DOWN、TOP TENSION、CPU POWER)
MOTHER BOARD	24V POWER、SIGNAL LAMP、LCD

DISASSEMBLE MAIN ROLLER (OLD)

KH-313 SERIES THE STEPS OF DISASSEMBLE MAIN ROLLER

< STEP1 >

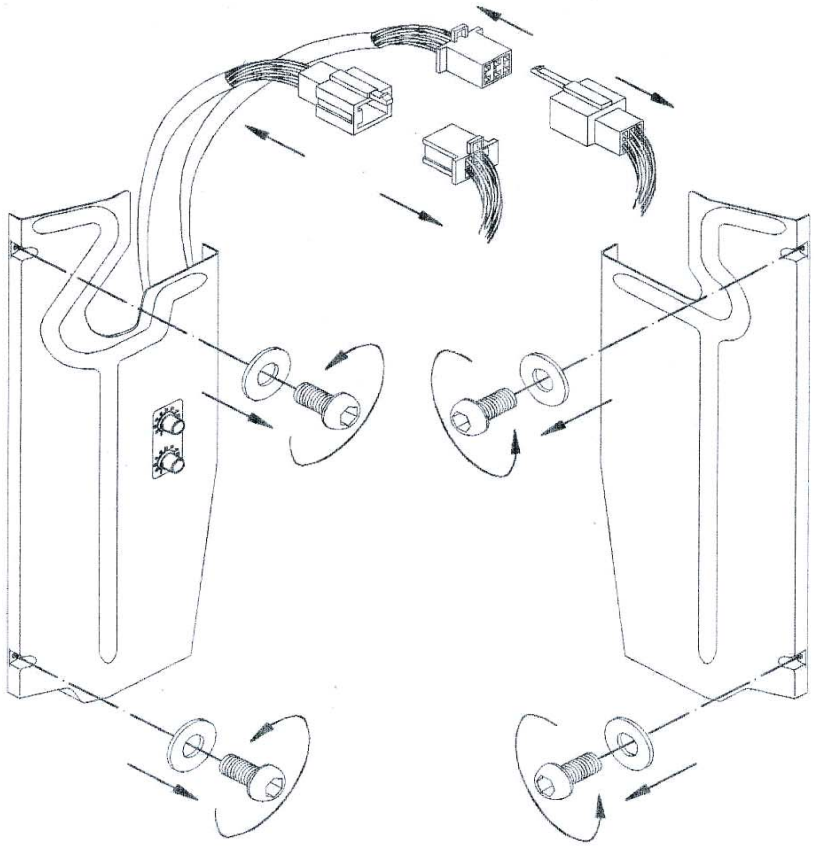

< STEP2 >

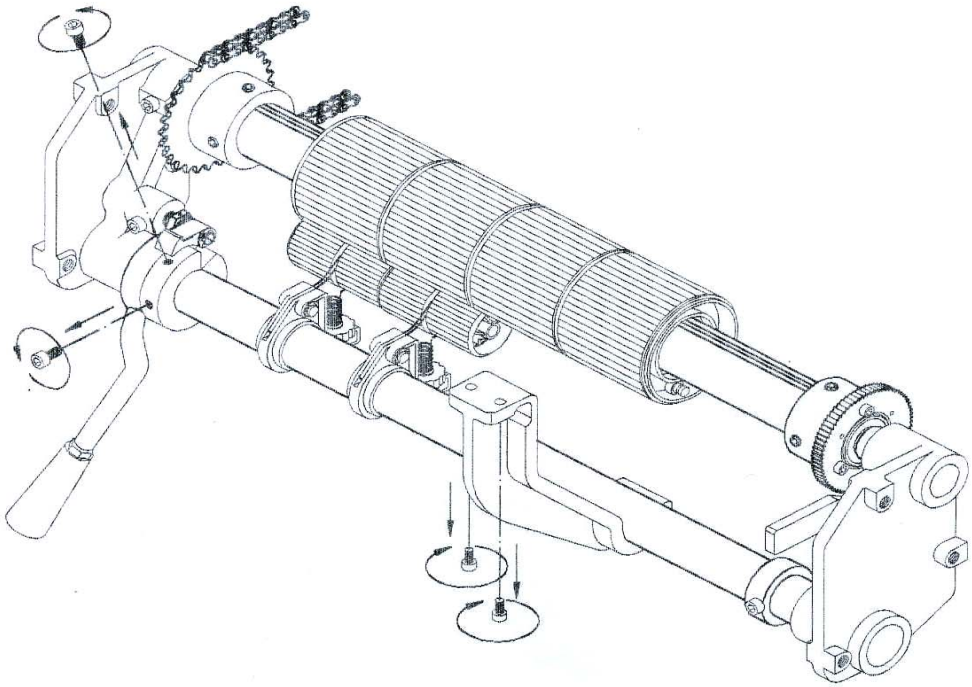

KH-313 SERIES THE STEPS OF DISASSEMBLE MAIN ROLLER

< STEP3 >

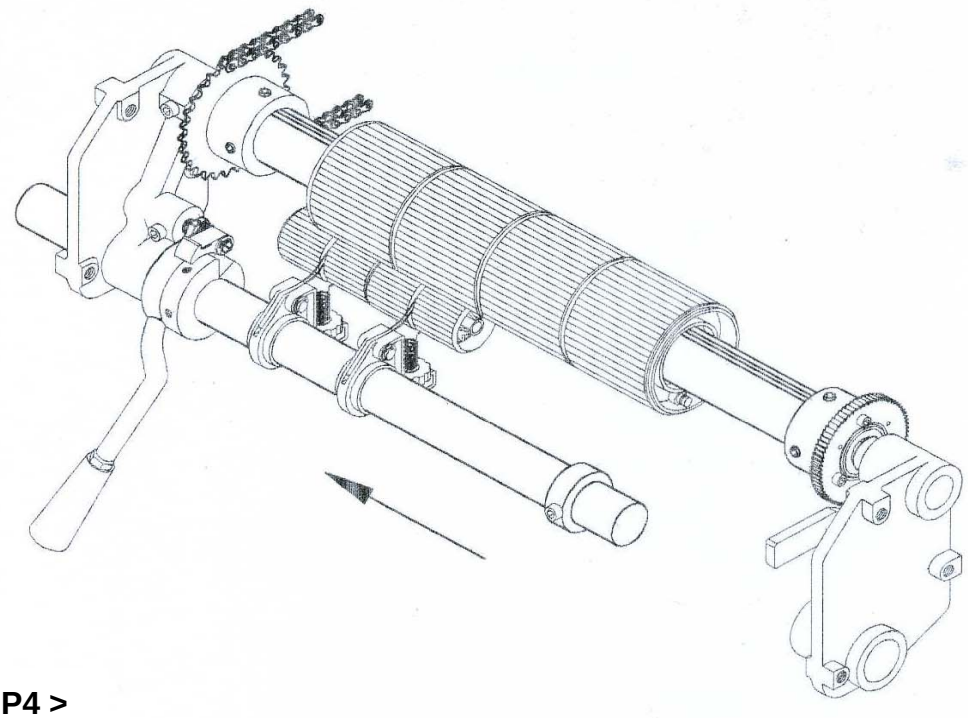

< STEP4 >

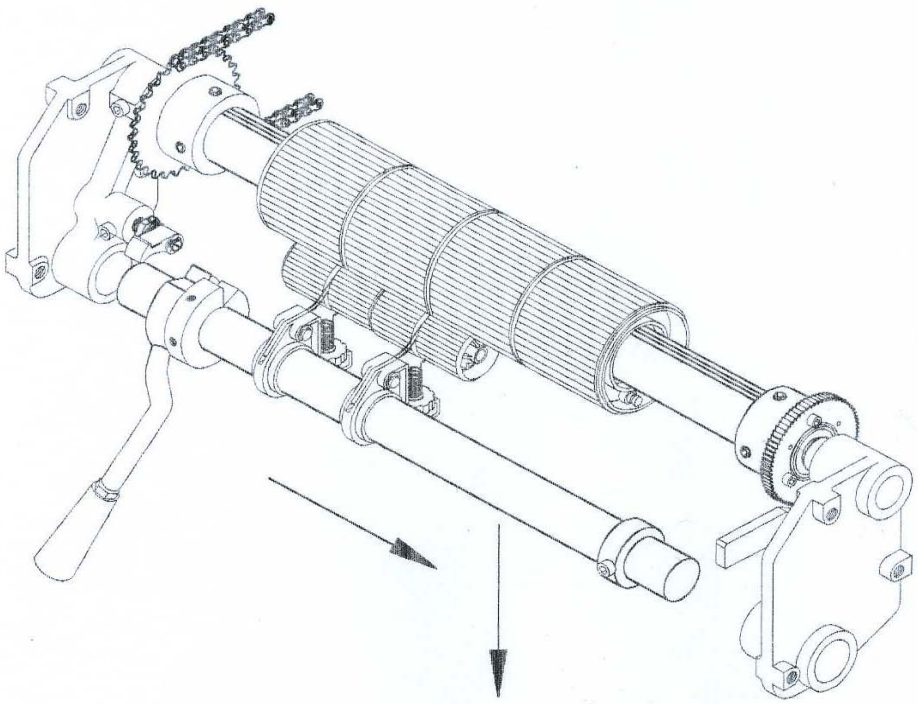

KH-313 SERIES THE STEPS OF DISASSEMBLE MAIN ROLLER

< STEP5 >

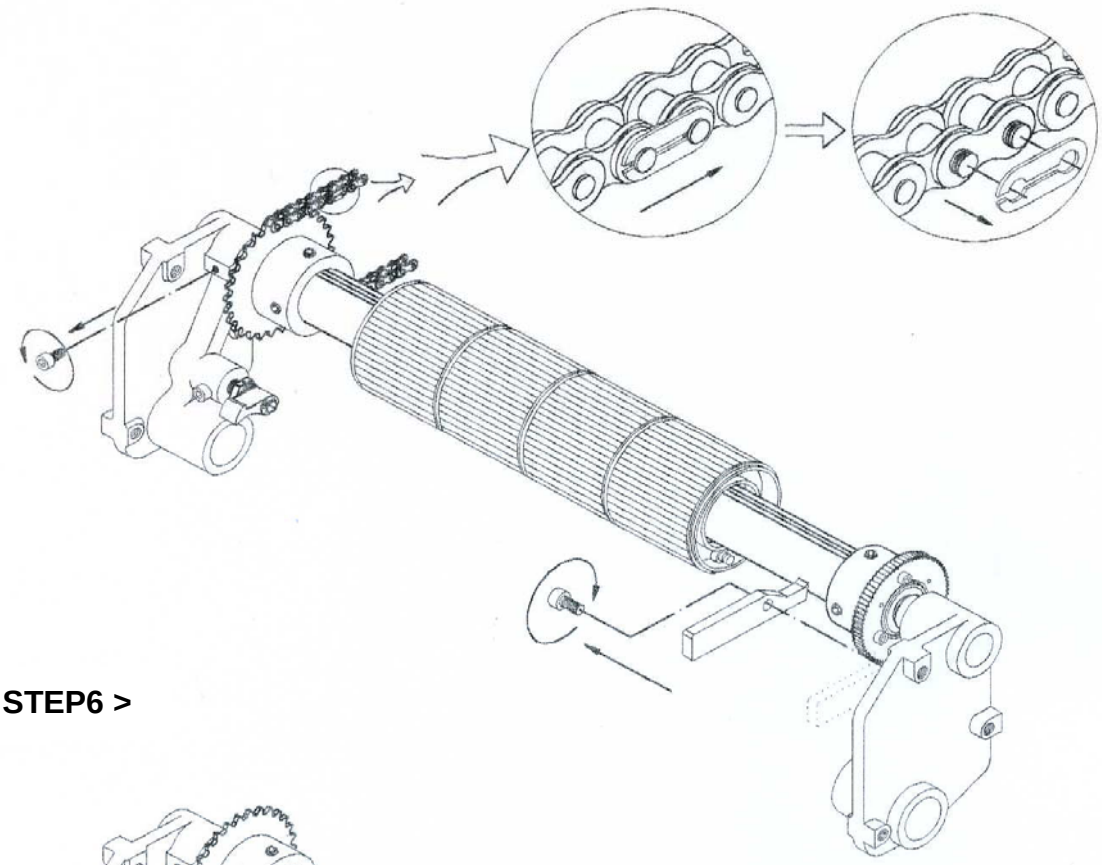

< STEP6 >

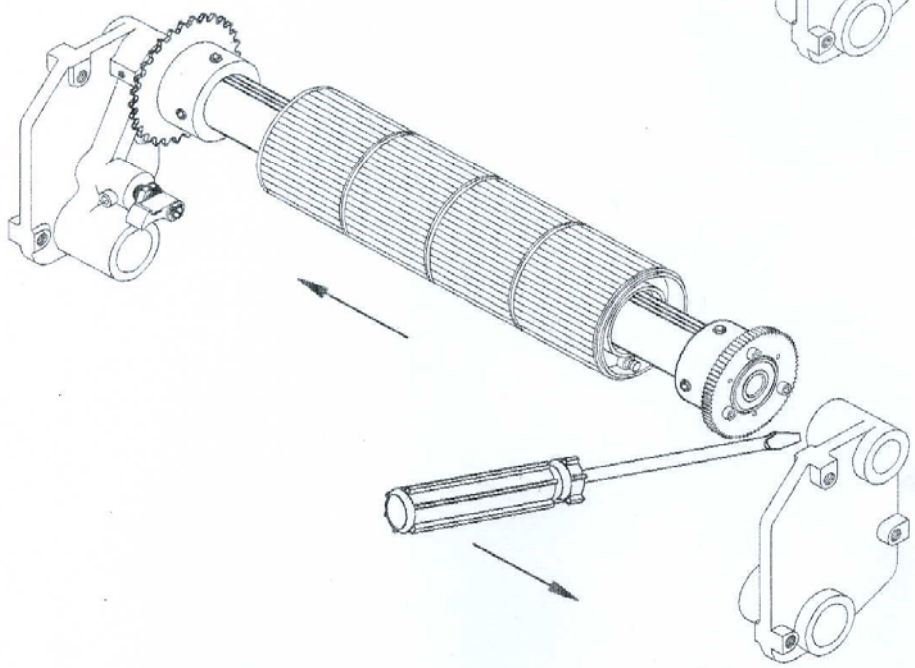

KH-313 SERIES THE STEPS OF DISASSEMBLE MAIN ROLLER

< STEP7 >

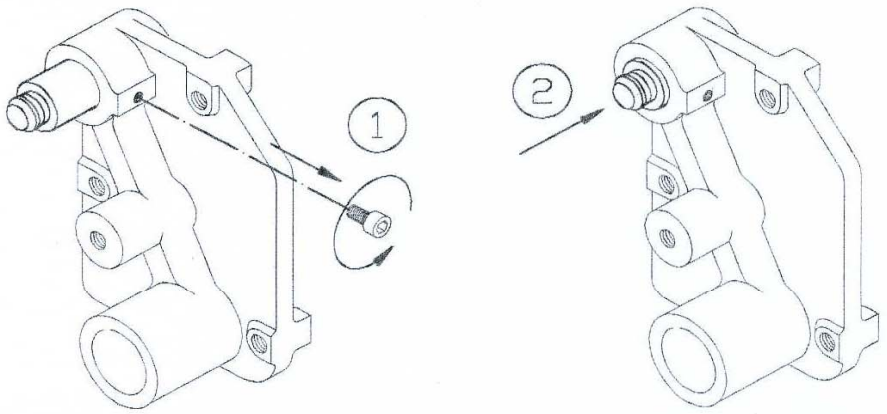

< STEP8 >

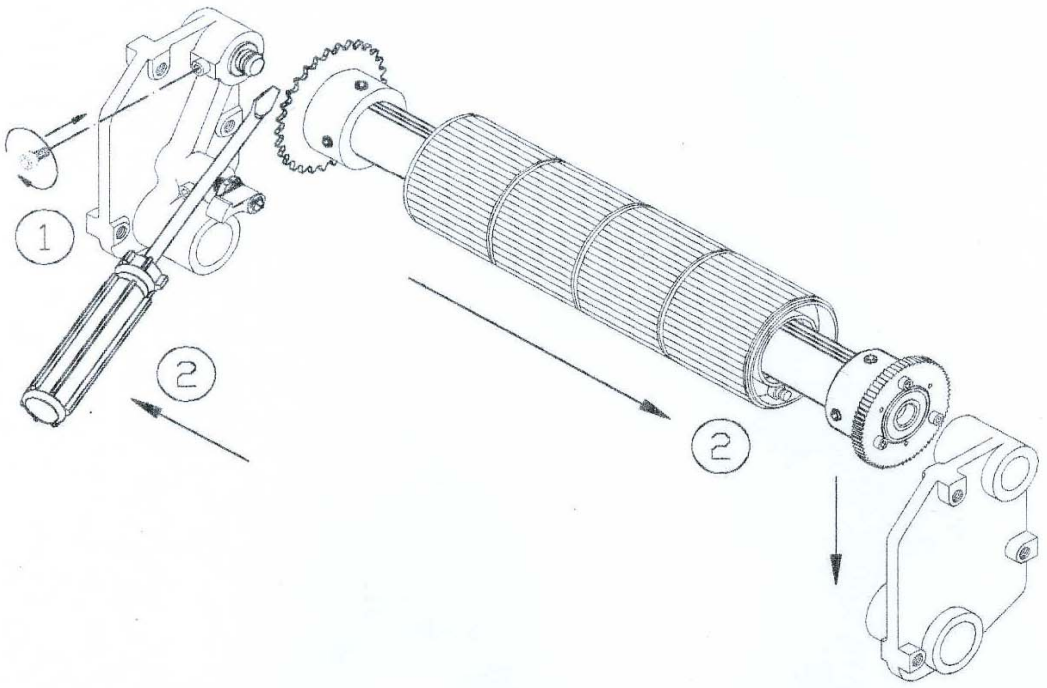

DELTA INVERTER PARAMETER

1) KH-313 & 313J & 313TJ

KH-313 & 313J & 313TJ

CONSTANT NO.	INITIAL SETING
00-02	10： Refresh mode
00-07	01： Security mode
00-08	01： New parameter mode
01-00	180
01-09	1.2
01-10	0.3
02-00	01
02-01	02
02-03	10
04-00	1.20
04-01	01
04-19	0.03
07-01	16
07-02	3.0
07-04	06
07-06	19428
08-00	50
08-02	0.3

Remark：1. Inverter display shows <12.10> after setting up parameters.

2. If more or less than <12.10>, it needs to adjust one variable resistance VR. Turning clockwise is to increase and counterclockwise to decrease.